TOHO® By GARRICK

CE

ELECTRIC CHAIN HOIST

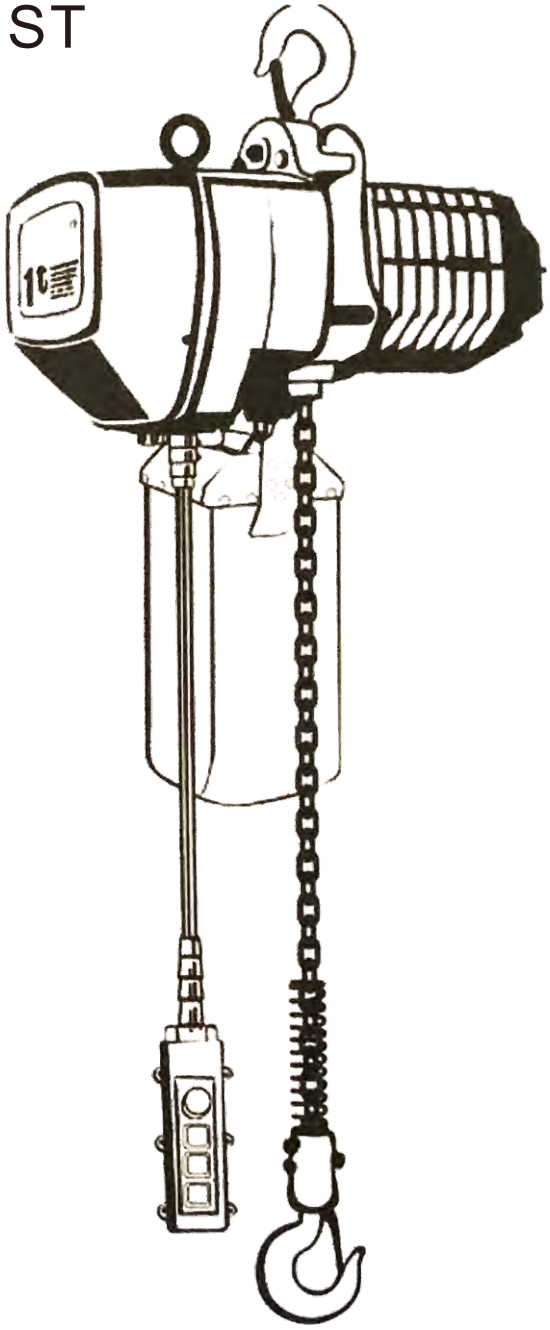

OPERATING MANUAL

Contents

■Disclaimers

- We do not undertake any responsibility for the damages caused by fire,earthquake,lightning or other natural disasters,acts of third parties,accidents,the user's intent,negligence or misuse,or other damages from the conditions beyond the useage environments.
- We do not undertake any responsibility for the collateral damages caused by using this product or cannot put into use, such as the loss of business interests, business interruption, damage to lifting loads, etc.).
- We do not undertake any responsibility for the damages caused by non-compliance with the contents of the operating manuals or beyond the specified scope.
- Not involved with the company due to a mechanical malfunction caused by the combination of such damages arise, the Company does not undertake any responsibility.

■Use restrictions

- Do not move for the transportation of persons,as this product is not designed and produced as a manned transport products.
- Please do not use outside of the designing occasion, the products is designed under the purposes of load up and down, horizontal loading and unloading in normal use environment.
- Do not use this product as parts of a non-mechanical devices with moving loads.

■Operation and use

- Pls read carefully of this operating manual and other user manuals,understand the whole contents before you operation and use our products.
- Pls wear protective clothing and appliance before operator operation and use our products.

■Safety precautions

- Operate any kind of lifting equipment may have caused the potential risk of loss of personnel or property.
- Dangerous substantial increase in the chance of the operators don’t follow the correct operation mode and precautions. So as to ensure safe operation, before you start to use our product, each operator should be fully familiar with the description of the contents of all manuals and precautions.

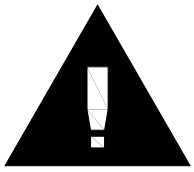

When there appears warning symbles like the beside ones show in this frame in the manuals contents,and these contents have been bordered, it means these text are very important safety instructions or precautions.The operators have to be sure to fully comply with the instructions, otherwise it is likely to endanger you or other people's lives and property. Therefore, pls read carefully of our operation manuals and precautions before you use our electric chain hoists.

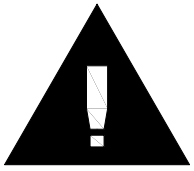

■Preface

The contents covered in this manual can help you with correct installation,operation and maintenance of our electric chain hoists and let your hoists operated in the best safety, efficiency and economy.

Pls thoroughly study on our manual contents,correct process,operation modes and preventative maintenance before you use our hoists, you will get practical and reliable services.

In order to provide you with the necessary replacement parts in a fastest time,pls kindly supply us with the bellowing information when you get in touch with us:

（1） Model type

（2） Product serial Number

（3） Name of parts which need to be replaced（It is better to enclose with explains）

You will find out that electric chain hoists will offer you with many years various and satisfied services.

Whenever you have any doubts, pls do not hesitate to contact with us：

（Dealer’s stamp）

■Safety attentions

Chapter 1 Operational methods

1. Main specification

1.1 Specification chart

Suitable for all kinds of our electric chain hoists

1-1

Item		Specs	
Operating temperature range（℃）		-20 to +40	
Operating humidity range（%）		85 or below	
Protection class	Hoist	IP54	
	Button switch	IP54	
Power		3 phases，200～600V，50/60HZ	
Noise level（dB）	Single speed hoist	81	
	Double speed hoist	81	
Chain specs	Working load limit	Diameter（mm）	Chain pitch（mm）
	0.3, 0.5	¢6.3	19
	1t, 2t, 3t	¢7.1	21
	1.5t ,2t	¢10.0	30
	2.5t，3t，5t,7.5t,10t,15t,25t	¢11.2	34

Remarks：（1）When the operating temperature and humidity is beyond the above table, pls get in touch with agency for more details.

（2）Expected usage：our hoists are designed to lift up and down under the common atmospheric and working conditions.

（3）The noise level is measured under the normal level of one meter from the hoist working place where the hoists is proceeding with standard operation.

1.2 Mechanical level and service life

The guarantee of the service life and safety for electric chain hoists is based on the operator strictly follows bellowing operation levels.

Our electric chain hoists are designed to be 1Am level in FEM standards（FEM 9.511）

The average of the daily operation hours and total operation hours is calculated by load distribution.

Load level	Definition	Cubic value	Average daily operation hours(hours)					
1 (light)	The mechanism and parts are frequently under light load, and there is no max.load unless exceptional conditions.	K≦0.50	≦2	2-4	4-8	8-16	≦16	>16
2 (medium)	The mechanism and parts are frequently under light load, but also under max. load with low frequency.	0.50<k≦0.63	≦1	1-2	2-4	4-8	8-16	≦16
3 (heavy)	The mechanism and parts are frequently under medium and heavy load.	0.63<k≦0.80	≦0.5	0.5-1	1-2	2-4	4-8	8-16
4 (overweight)	The mechanism and parts are frequently under max. or almost reach to max. load.	0.80<k≦1.00	≦0.25	0.25-0.5	0.5-1	1-2	2-4	4-8
			1Bm	1Am	2m	3m	4m	5m

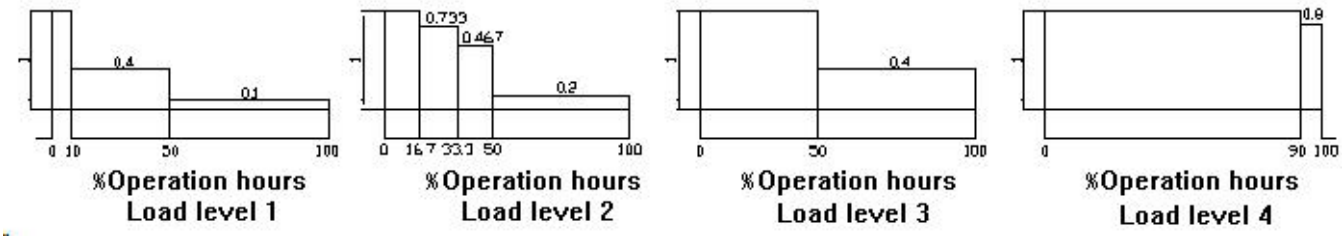

Basis of selecting motors for lifting equipments

Group		Intermittent Service			Short-Time service
F.E.M	ISO	Cycles/h	Starts/h	(ED%)	Operation period min
1 DM	M1	15	90	15	7.5
1 CM	M2	20	120	20	7.5
1 BM	M3	25	250	25	15
1 AM	M4	30	180	30	15
2 M	M5	40	240	40	30
3 M	M6	50	300	50	30
4 M	M7	60	360	60	60
5 M	M8	60	360	60	>60

Chapter 2 Regular Inspection

2. Periodic inspection

2.1 Daily inspection on electric chain hoists

Items	Inspection ways	Standards	Resolutions to deviations
Marks such as nameplates、 labels etc.	·Visual check	· No peeling and clear marks.	Proceed with cleaning, repairing and replacing. Pls mark the serial number for replacing.
The deformation or damage of body parts	· Visual check 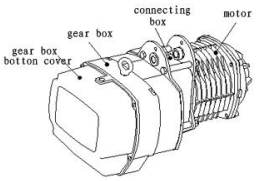	· No remarkable deformation, damage, defect and chap.	Replace the parts which are deformation, damage, defect and chap
Bolts,nuts and cutters'loosing or falling off	· Visual and using tools check	· Practical and reliable installation. Even an tiny bolt, when it is loosing it will cause the whole equipment falling down. Therefore pls make sure the precise installations. Otherwise it will lead to death or serious injury etc.	Precise installation

Items	Inspection ways	Standards	Resolutions to deviations
Extend of pitch	·Check by chain measurement tool	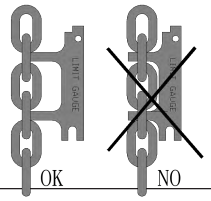	
Attrition of chain diameters	· Check by chain measurement tool	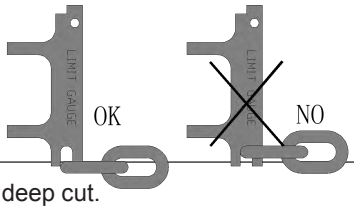	
deformation , damage, wind	· Visual check damage chap 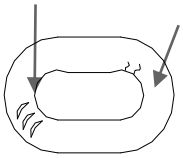 Confirm the chain if or not stick to the welding spatters by visual.	· No deep cut. · No deformation. · No welding spatters. · No wind. · No chap.	Replace load chains
Rust and corrosion	· Visual check	· No remarkable rust and corrosion.	Replace load chains
Distortion	· Visual check	·No distortion due to bottom block roll over of double chain models. 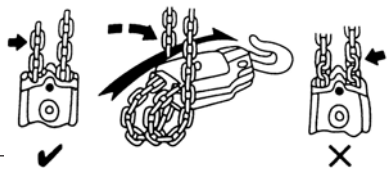	Correct distortion
Oil supply	· Visual check	· Adequate supply of oil. 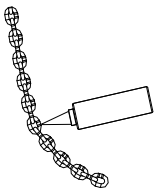	Oiling

<table>
<tr><th>Items</th><th>Inspection ways</th><th>Standards</th><th>Resolutions to deviations</th></tr>
<tr><td>Limit switch</td><td>Check by pushing button</td><td>· Keep operating until upper and lower limit where motor shutdown automaticly.</td><td>Replace limit switch, Disassemble and clean the limit lever</td></tr>
<tr><td>Movement confirmation</td><td>· Check by pushing button</td><td>· Load chain can roll up easily.
· Move towards the same direction to the button’s.
· Motor shutdown immediately when stop operating.
· All movements shutdown when push the E-stop button.
· Push any other buttons can’t cause any moves when pushing the E-stop button.
· All movements back to normal operation when relieve the E-STOP button.</td><td></td></tr>
<tr><td>Brake</td><td>· Check by pushing button</td><td>· Brake quickly works and bottom hook stop movements immediately when the operation is stoped.
(The amount of movement of the load chain is within 2 to 3 rings)</td><td></td></tr>
<tr><td>Chain spring</td><td>· Check by visual and measure dimensions
  </td><td><table>
<tr><th rowspan="2">Chain</th><th colspan="2">Spring length</th></tr>
<tr><th>Standard</th><th>Limits</th></tr>
<tr><td>Φ6.3</td><td>145</td><td>140</td></tr>
<tr><td>Φ7.1</td><td>145</td><td>140</td></tr>
<tr><td>Φ10.0</td><td>135</td><td>129</td></tr>
<tr><td>Φ11.2</td><td>160</td><td>152</td></tr>
</table></td><td>Replace chain spring</td></tr>
</table>

<table>
<tr><th>Items</th><th>Inspection ways</th><th>Standards</th><th>Resolutions to deviations</th></tr>
<tr><td>The attrition and opening of the hook
 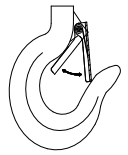 </td><td>· Check by visual and vernier caliper
 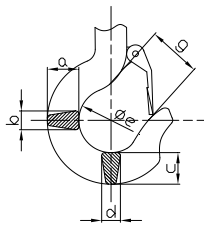 </td><td>· No remarkable open.
· No remarkable attrition.
<table>
<tr><th>load</th><th>a</th><th>b</th><th>c</th><th>d</th><th>e</th><th>g</th></tr>
<tr><td>0.3 0.5</td><td>27</td><td>18</td><td>25</td><td>17</td><td>35</td><td>28</td></tr>
<tr><td>1</td><td>34</td><td>24</td><td>30</td><td>24</td><td>42</td><td>32</td></tr>
<tr><td>2</td><td>46</td><td>29</td><td>39</td><td>30</td><td>49</td><td>40</td></tr>
<tr><td>3</td><td>56</td><td>35</td><td>49</td><td>34</td><td>59</td><td>48</td></tr>
<tr><td>5</td><td>67</td><td>43</td><td>57</td><td>44</td><td>60</td><td>48</td></tr>
<tr><td>7.5 10</td><td>82</td><td>55</td><td>80</td><td>48</td><td>85</td><td>80</td></tr>
<tr><td>15</td><td>110</td><td>78</td><td>120</td><td>80</td><td>120</td><td>90</td></tr>
<tr><td>20 25</td><td>142</td><td>95</td><td>155</td><td>98</td><td>150</td><td>115</td></tr>
</table></td><td></td></tr>
<tr><td>Deformation, damage and corrosion</td><td>· Visual check</td><td>· No remarkable deformation, harmful damage and corrosion.</td><td>Replace hook</td></tr>
<tr><td>Hook safety block</td><td>· Check by visual and fold and unfold actions</td><td>· can exactly fold inside of the hook
· No deformation and work flexiblely
Dangerous
··Don’t use the hook which safety block is loosing.
Otherwise it will lead to death or serious injury accidents.</td><td>Replace hook safety block</td></tr>
<tr><td>Hook movements （rotate）</td><td>· Check by visual and rotate by hands
 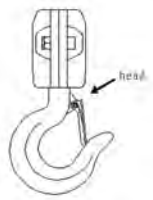 </td><td>· No remarkable interspace between bottom supporting and top.
· equal at right and left.
· easy to rotate 360°.</td><td>Replace hook</td></tr>
</table>

2.2 Unpacking

After unpacking,pls careful check over the appearance of the cable, gear box and motor shell.
Check the quantity of the bellowing items as well.
Every set of our hoist should including the bellowing standard spare parts：

1. Chain bag（box）	1pcs
2. Control cable	1mtrs
3. Button switch	1pcs

2.3 Supply voltage

NOTICE

If the supply voltage exceeds ± 10% compare to the standard voltage, operation may cause damage to the motor under this abnormal voltage. Thus operator have to confirm whether the power supply voltage within the operating range of the standard firstly before operating the hoists.

2.4 Installations

CAUTIONS

Strictly prohibited connecting to the power before the completion of the installation process.

（1）Chain bag assembly

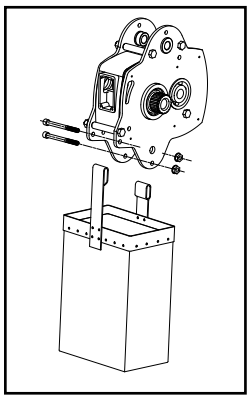

（2）Switch on the power supply to the hoist and operate the push button（operated by professional）.

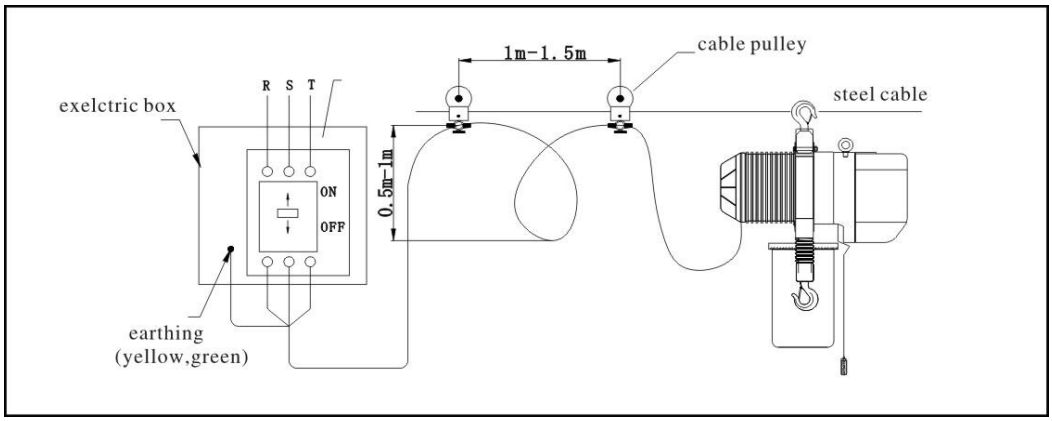

（3）Operation test

（a）Press the button indeed，let the hook down untill the limit spring touches the limit switch,the motor will stop automatically.

（b）Press the button indeed untill the chain is collected into the chain bag completely, and the motor stops.

c）Test the function of the emergency stop switch (if the optional emergency stop switch is purchased)Press or button, meanwhile press the emergency stop switch. Check if the hoist stop running immediately or not after press the emergency stop switch, and make sure the hoist can not be started again when press this button. Rotate the emergency stop switch clockwise, make the emergency switch back to the original place. When it bounces back, the hoist can be started again. If any of tests above is failed, please check the distribution circuit and the automatic locking of the emergency switch.

（d）Check the lubricating condition of load chain (the load chain has been lubricated before delivery, but could be dried when delivery). Any lubricant you have can be used to lubricate the chain. We suggest that infunde a little of lubricant into the chain bag to protect the load chain.

（e）Check the direction of the chain eyes. All welding points should be of the same direction. The hoist can not be operated properly and utterly unless all welding chain eyes are in the same line.

2.5 Installation of the trolley

（1）Install the trolley

1）Insert the suspension pin into the lateral plate G and lock it with suspension pin bolts and nuts.

2）Install the suspension pin with adjusting disk.

3）Install the suspension pin into the hanger T. The nameplates of hoist and trolley should be in the same direction.

4）Install more gaskets into the suspension pin before insert it into the lateral plate S.

5）Install the outside adjusting disk and spacerpin into the suspension pin, and insert the cotter pin into the spacerpin. When install the spacerpin, check if the cotter pin can be seen at the left side from the front of the trolley switch box.

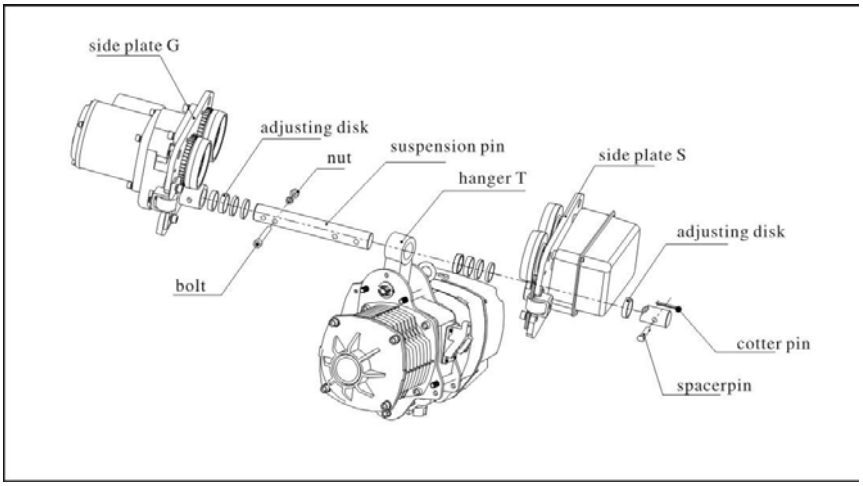

（2）Adjust width of the trolley

Please adjust width of the trolley according to below drawing to get appropriate clearance.

Size A is the dimension when two side plates stretch outside completely.

Size A must be approximate B (the width of rail flange) +4mm.

Please adjust size A by increasing or decreasing adjusting disk. Insert the cotter pin into the spacerpin and bend two branches of cotter pin if the size A is ok.

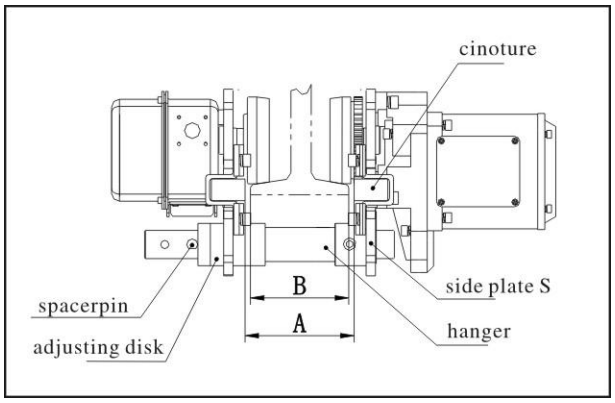

WARNING

The nut must be fixed and strong, insert cotter pin and bend it completely.

（3）Install trolley into the beam.

1）Install the trolley at the end side of the beam and than slip the trolley which has been connected with hoist already to the appropriate place. This is the most convenient method.

2）If first method is unavailable, please follow drawing 5-9.

a）Unload the brake stopper from hole A on the suspension pin, and insert it into hole B. Insert cotter pin again and bend it completely.

b）Pull the side plate S and G outside then lift the trolley untill the orbit wheel and orbit surface is in the same horizontal. Put the orbit wheel of side plate G onto the surface of the orbit.

c）Hold the side plate G and stop it from dropping from the orbit. Push side plate S harder and put its orbit wheel onto the surface of the girder.

d）Unload the brake stopper from hole B and insert into hole A. Do not forget to bend the cotter pin.

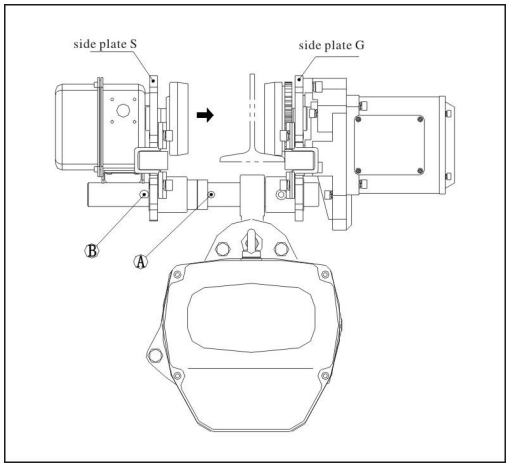

Chapter 3 Problems and Solutions

3. Fault Resolution

3.1 Wiring Diagram

The above mentioned wiring diagrams above are only for reference, user should take the one inside the electric box as the proper one.

The electric specifications can be made according to the follows:

（a） 3 phase

（b） Frequence

（c） Single or double voltage

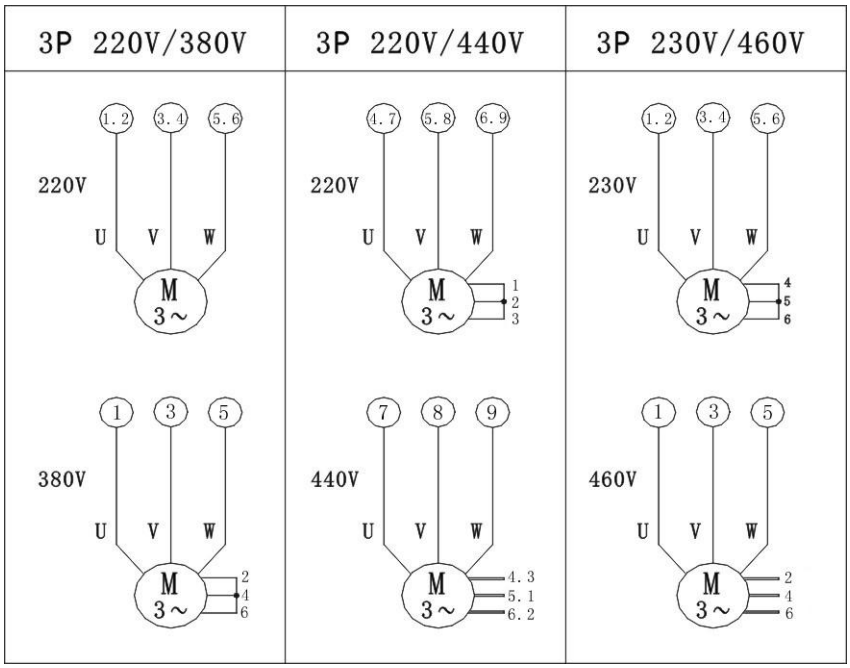

（1）2 directions wiring diagram for single speed

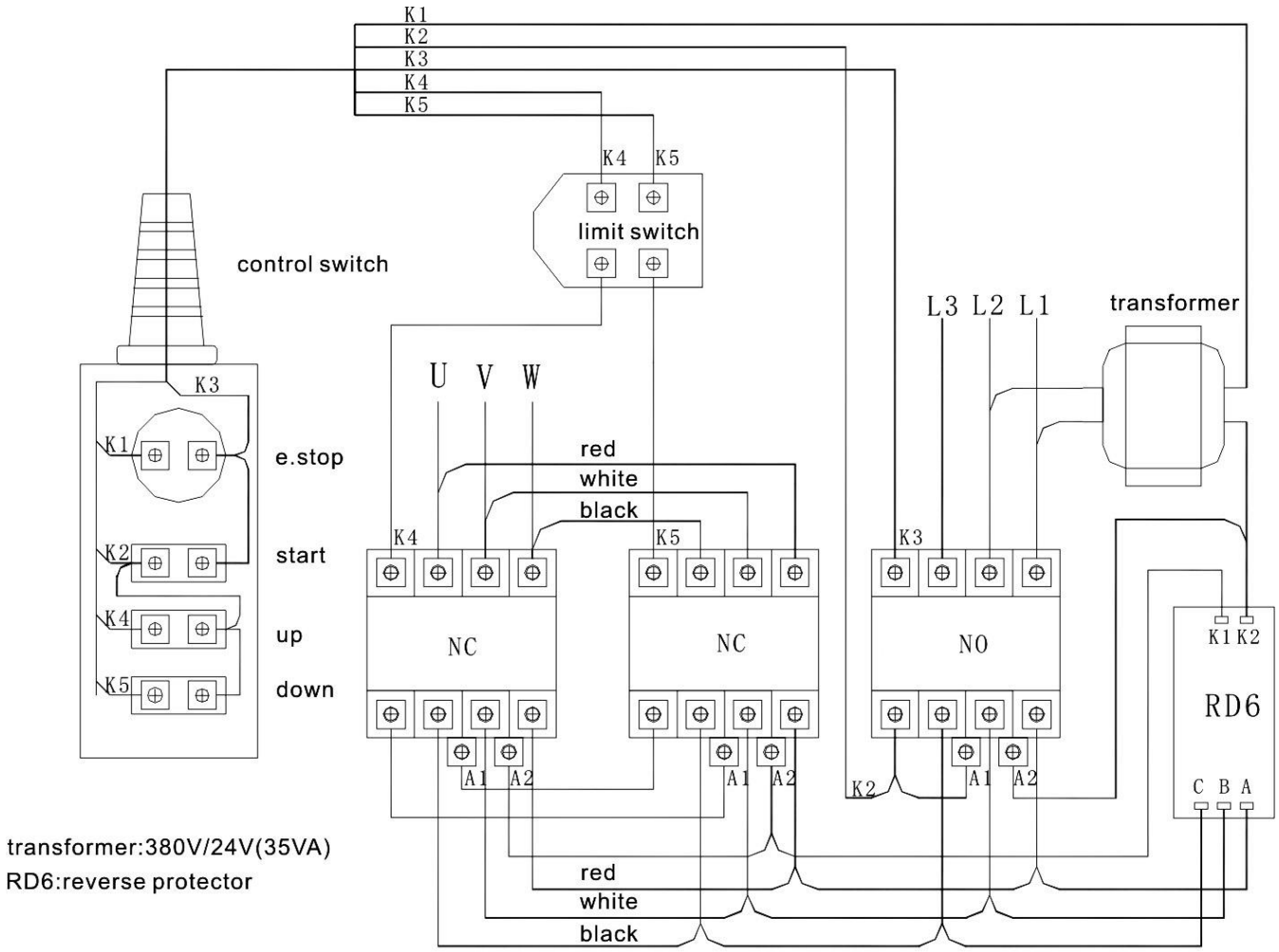

“e.stop” means emergency stop

（2）4 directions wiring diagram for single speed

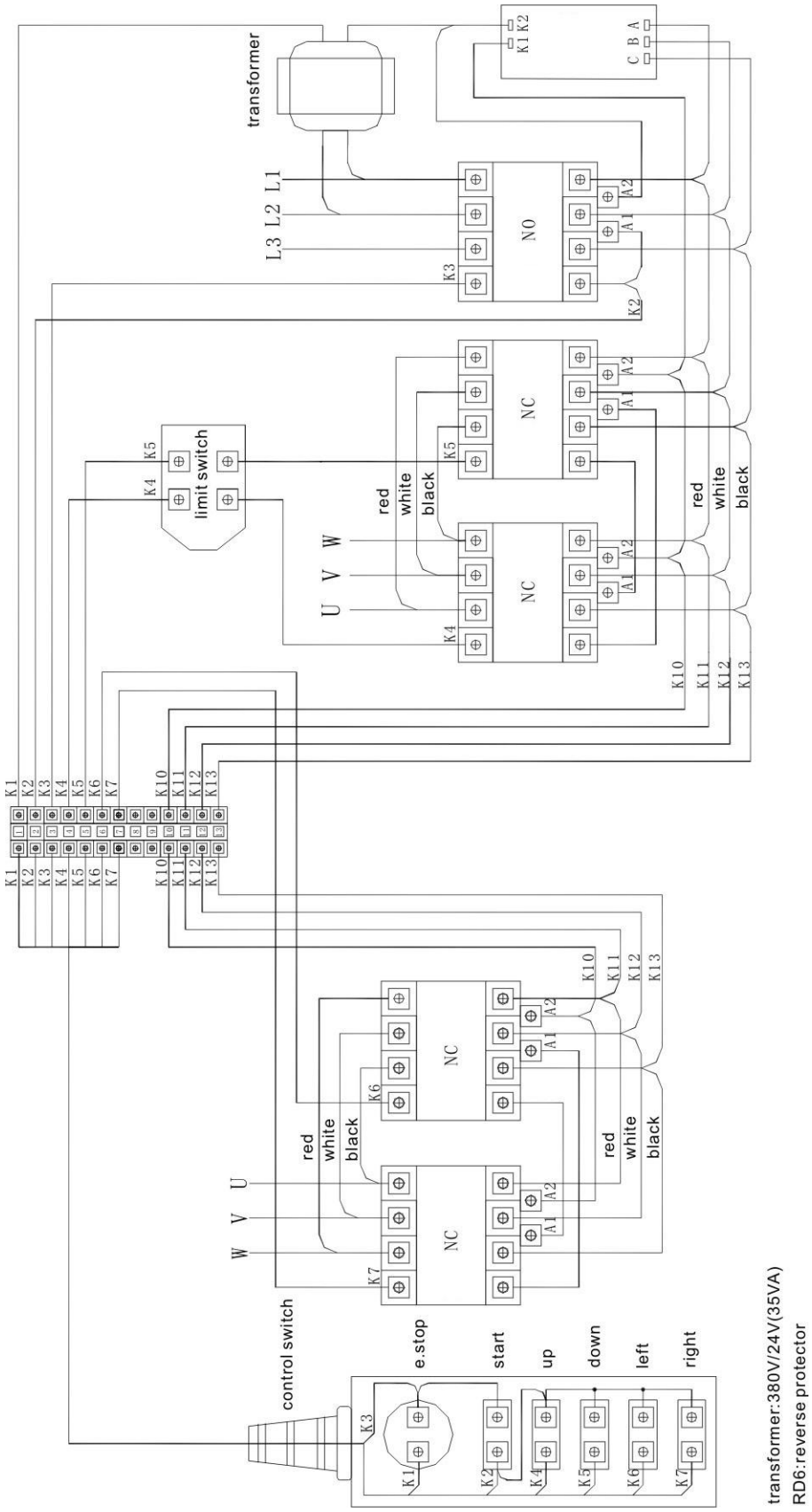

（3）6 directions wiring diagram for single speed

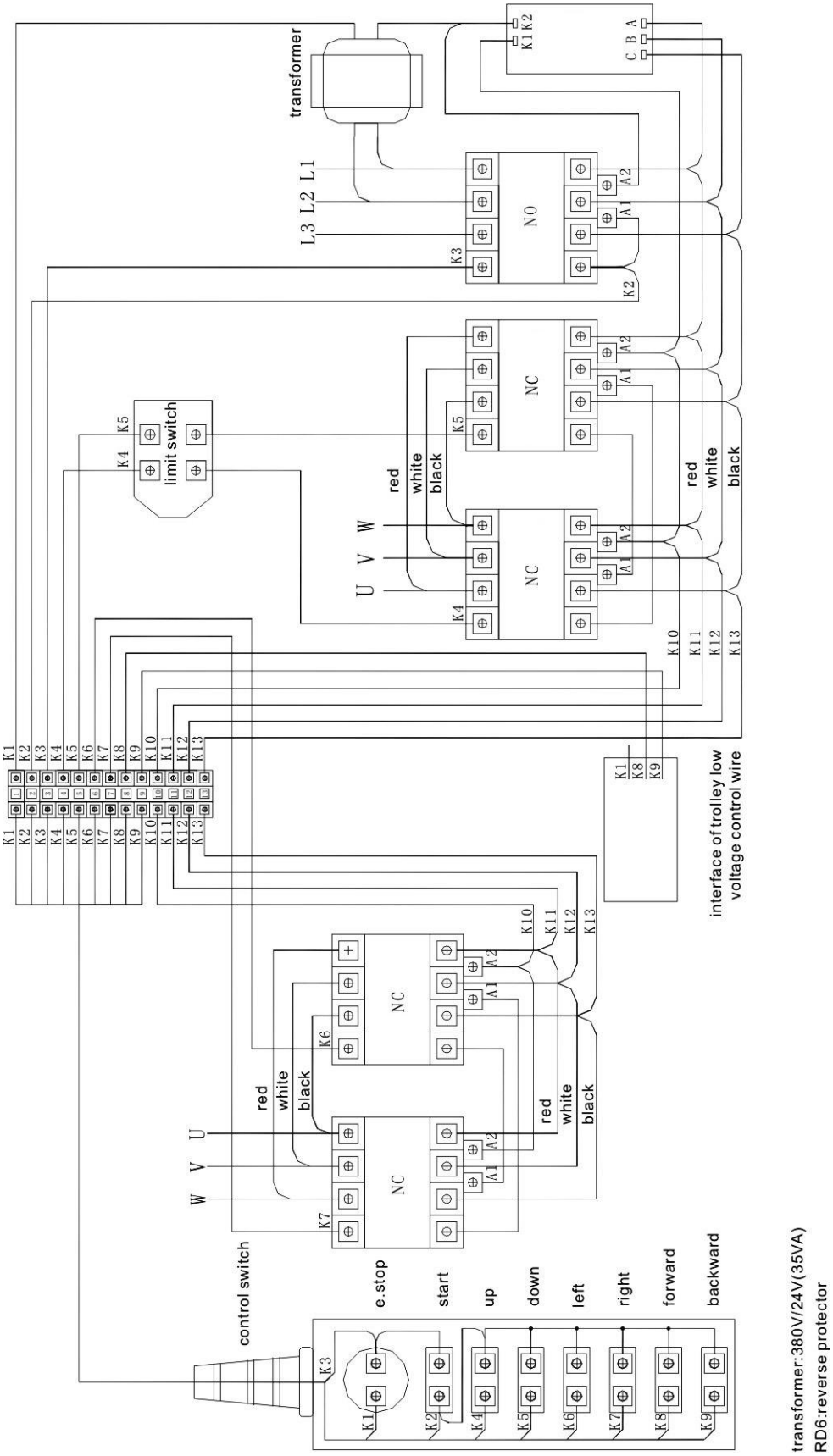

（4）2 directions wiring diagram for double speeds

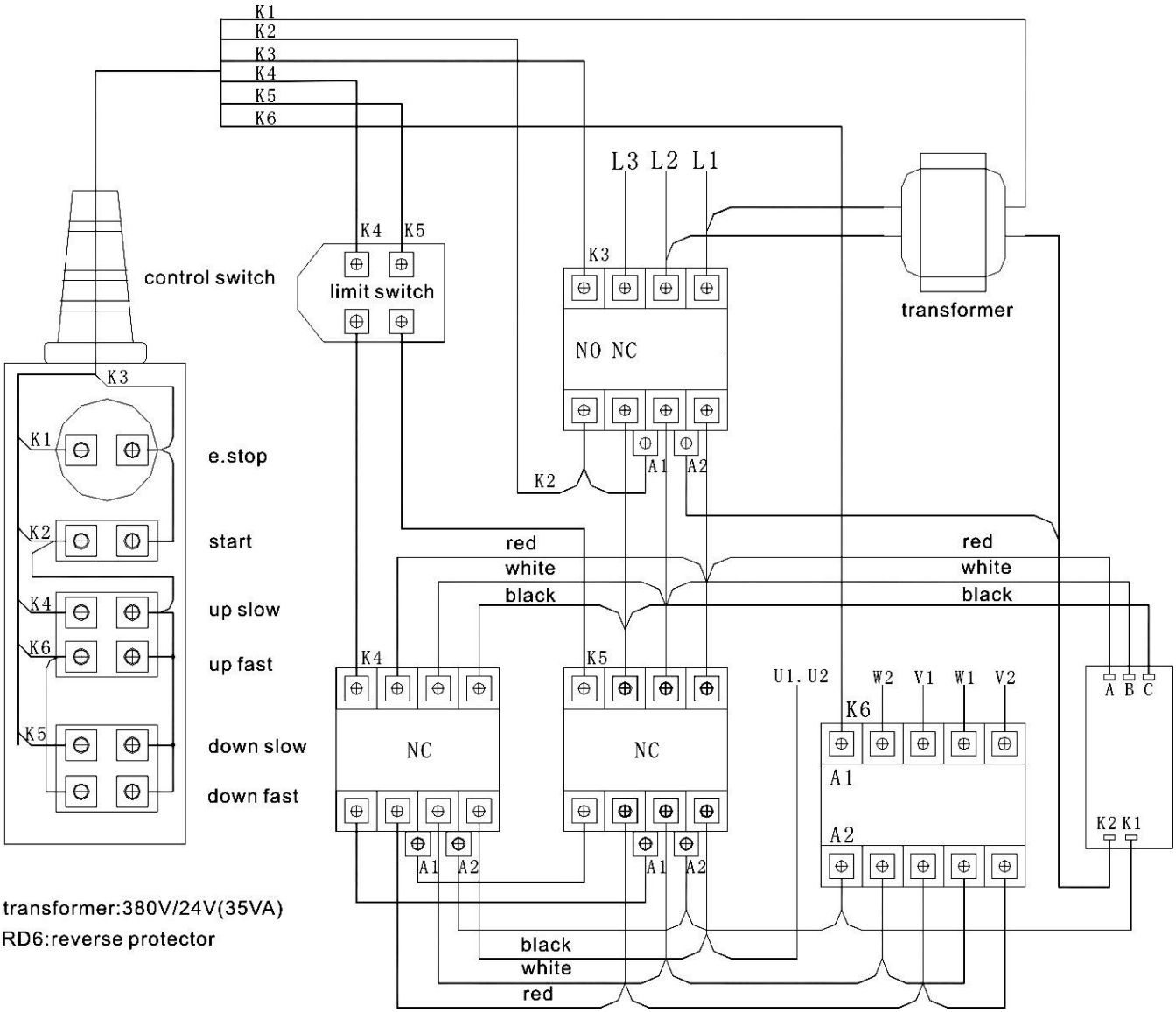

（5）4 directions wiring diagram for double speeds

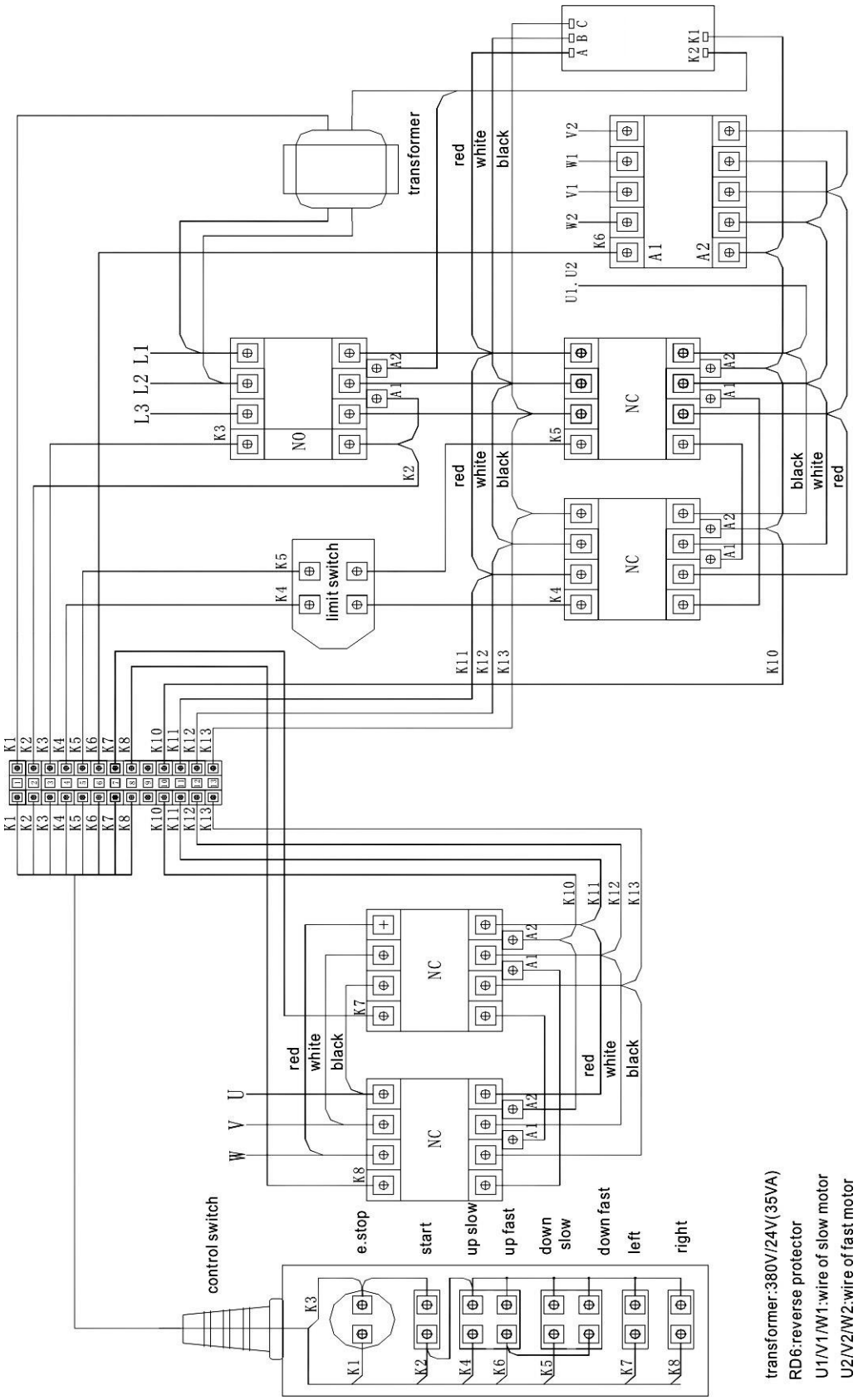

（6）6 directions wiring diagram for double speeds

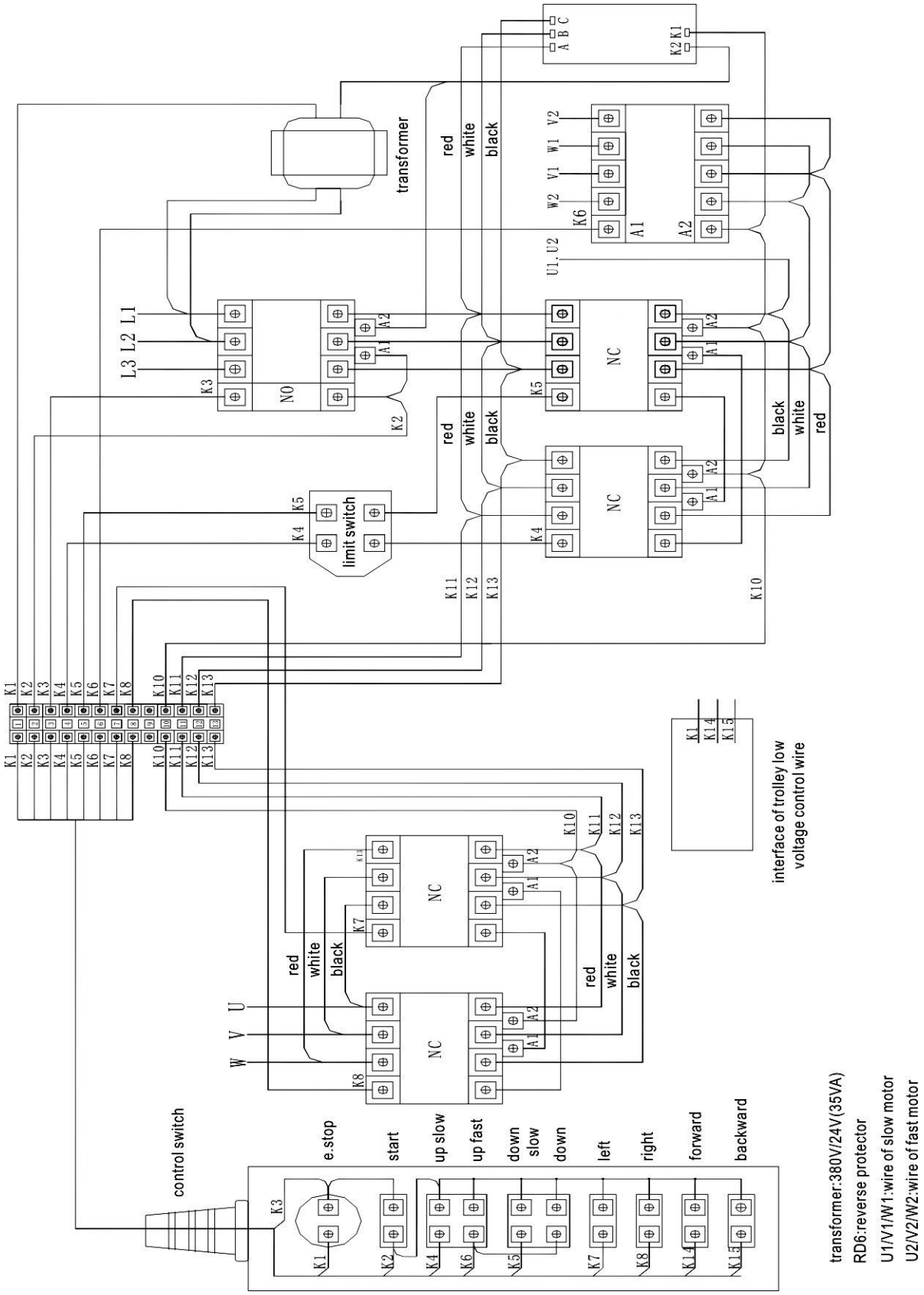

（7）wiring diagram for single phase motor

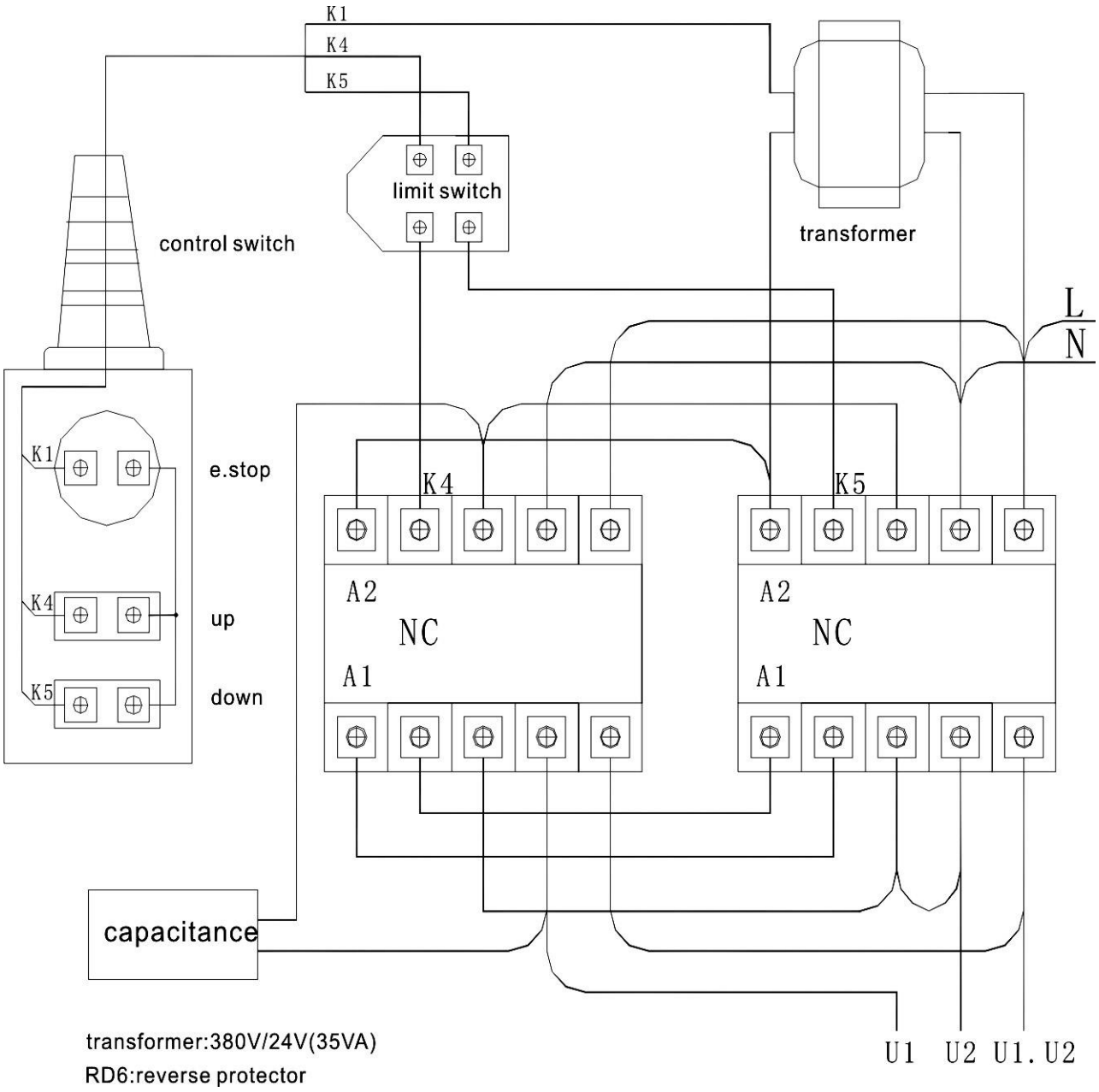

3.2 Reason of faults and inspection

Faults			Major Cause	Check Items	Remarks
Can not operate in non-load state	Brake in soundless	Contactor is soundless	Exceptional voltage	Power	
			Fault of operating circuit break-off, electric parts overburning	Power supply	
				Inner wiring	
				Contactor	
				Transformer	
				Up and down limit switch	
				Button switch	
		Contactor is soundable	Fault of power circuit break-off, overburning motor, brake	Motor	
				Brake	
				Inner wiring	
				Contactor(junction fusing)	
	Brake in soundable		Overburning of driving part's broken bearing	Gear, joint	
				Bearing	
Can operate in non-load state	Can not lift up（motor roar）		Default Phase（single phase operation）	Power	
				Feed power	
				motor	
				Contactor(junction fusing）	
	Can lift up but very slow		Low voltage	Feed power	
Different reaction from the button	Different reaction from the button（inverse reaction from the button）		Anti-phase wiring	Feed power	
			Wrong wiring	Inner wiring	
				Button switch	
	No reaction after pressing the button		Wire break of operated circuit	Inner wiring	
				Button switch	
			Fault of electric installation parts	Contactor	
				Up and down limit switch	
				Contactor	
				Brake	
				Feed power	
				Inner wiring	
				Button switch	
				Load chain	
				Load pulley, bare pulley	
				Gear, joint	
				Bearing	
	Noise of brake	Running (grating)	Drag	Brake	
		Stop	Wear of friction plate	Brake	
	abnormal noise of rail curve（grating）		Obstruction of orbit/wheel	Operation of trolley	

Trouble description		Reasion	Inspection Items	Remar
Can not move in horizontal		Rail declining	Trolley movement	
	Electric trolley /manual trolley	Inclined pull (wheel is	Trolley movement	
	Electric trolley /manual trolley	Gear occlusion problem	Trolley movement	
	Electric trolley /manual trolley	Brake fastening	Trolley movement	
	Electric trolley	Electric faults	Trolley movement	
Move at “S” way and along with abnormal noise	Electric trolley /manual trolley	Rail & wheel’s	Trolley movement	
		Side wheel lack oil		
		Wheel uneven wear		
		Wheel deformation		
		Rail deformation,wear		
		Bearing aging		
		Brake wear		
Hook		deformation	hook	
Load chain		Wear,extension,deform	Load chain	
Electric shock once touching the machinery body or control switch		Imperfect earth,cable break-off	Electric Hands	
The hoist can not operation in non-loaded state	Brake is not soundable	Supply power voltage	Supply power voltage	
		operating circuit break-off,electric parts overburning	Cables	
			Wiring inside the	
			Transformer	
			Electrical relay	
			Limit switch	
			Push-button switch	
		Braking interval too large or small.	motor	
			Brinking	
		Tripping as motor too heat	Thermal protector	
	Brake is soundable	Bearing burning out,driving component wearing	Gear, top sub	
			Bearing	
	Load operation slow but work	Voltage drop	Feed cable	
	Low speed status operation;High speed status did not operation or work slow	Low voltage	Supply power	
		Voltage drop	Feed cable	
The movement did not coincident with as switch button	The movement did not coincident with as switch button	Motor wires inverse	Motor	
		Connection Error	Wiring inside the	
			Push-button switch	
	Operation all the switch button,the hoist did not work	operating circuit break-off	Wiring inside the	
			Push-button switch	
		Electrical installation fault	Limit switch	

3.3 Trouble & Measures

Supply Power：

Condition	Reasons	Confirmation & solution	Main occurrence	Measurement
NO Operation	supply voltage abnormal	Check the power supply, when each phase voltage abnormality	power supply extraordinary	Check the power supply regularly

Power Cable：

Condition	Reasons	Confirmation & solution	Main occurrence	Measurement
NO Operation	Wire break （2 or more）	Check the wire continuity,wastage and the pressure welding terminals, Repair or change the cable if abnormal	Strong force exerted	Firmly fixed on the cable support or
			Not use the anti vibration cable	Use the anti vibration cable in
			Twisted,knotted	No twisted, no knotted
			Interference other equipment	Used the fixed cable in the case of
	Overburning （2 or more）	Check the cables, Exchange the it if it is overburning	Temperature rise caused by	Adopt the proper cable
			Binding cable used	Do not use the
Starting slow or No operation	Off-capacity	Check the suitability of the cable dia, replace the cable if the Dia is	Voltage drop caused by	Adopt the proper cable
Operation only in free load (Single-phase)	1 wire break or overburning	To refer to above break or overburning item		
The movement did not coincident with as switch button	Power line connection error	Replace 2 wire	Wiring assembly error	connecting wire as per wiring diagram

Motor：

Condition	Reasons	Confirmation & solution	Main occurrence	Measurement
NO Operation	Coil burning (above 2 phase)	Measure phase resistance value; change the motor if all the value is infinite.	Over-current caused by over-voltage, low	Operation under Rated voltage
			Over-current caused by over load	Operation under Rated voltage
			Beyond the short-term rating and intermittent cycle	Confirmed that short-term rating, intermittent cycle
			Micro-Motion over, reverse braking operation (Starting	Do not over-operation
			Over-current caused by daggling brake	Refer to brake

	leading wire break （above 2 phase）	Measure phase resistance value; change the motor if all the value is infinite.	leading wire break	Do not infibulate
			Vibration ,Drop	Avoid large bumping in using
Operation only in free load (Single-phase state)	Coil burning (1 phase only)	Measure phase resistance value; change the motor if infinite value exist	hierarchical Short circuiting caused by wire low insulation	Do not mix foreign matter into the motor
	leading wire break （1 phase only）	Measure phase resistance value; change the motor if infinite value exist	leading wire break when assembly	Do not infibulate wires when assembly
			Vibration ,Drop	Avoid large bumping in using

Brake：

Condition	Reasons	Confirmation & solution	Main occurrence	Measurement
NO Operation	Braking Coil burning	Measure brake phase resistance value; change a brake if all the value is infinite.	Over-current caused by over-voltage, low	Operation under Rated voltage
			Micro-Motion over, reverse braking operation (Starting	Do not over-operation
			Over-current caused by over load	Operation under Rated voltage
			Micro-Motion over, reverse braking operation (Starting	Confirmed that short-term rating, intermittent cycle
			Over-current caused by operation in singe phase state	As In the single-phase operation can not load lifting.please
	Friction plate waste (beyond brake magnetism	Measure brake space, replace one if the space is over the use limit	Over Micro-operation	Do not over-operation
	Brake wire break	make sure wire is connected, replace it when disconnect	leading wire damaged when	Do not infibulate wires when assembly
	Brake wire insert terminal bad	Replace the insert terminal when it loose	Bad combination when assembly	Effective combination when assembly
	Rust	Replace a brake when insensitivity	unused in Humidity environment	use it regularly
			condensation	Pay attention when use it in the
	Friction plate waste	Measure brake space, replace one if the space is over the use limit	Over Micro-operation	Do not over-operation

Inside wiring：

Condition	Reasons	Confirmation & solution	Main occurrence reasons	Measurement
NO Operation	Break	Check the cable. Repair it when wire break	Vibration,drop	Avoid large bumping in using
			Leading wire damaged when assembly	Do not infibulate wires when assambly
		Check Connector, Repair it when wire break	Connector did not pressed well	Press it by the appropriate tool
	Wiring error	Refer to wiring diagram,properly connected	Wiring error	Refer to wiring diagram,properly connected
	Connector screws loose (overheat burning)	Fastenting	Bad fastenting	Effective fastening
			Vibration,Drop	Avoid large bumping in using
	Connector, insert terminal bad combination	Effective Combination	Bad combination when assembly	Effective Combination

Transformer：

Condition	Reasons	Confirmation & solution	Main occurrence	Measurement
NO Operation （Contactor No operation）	Coil burning,break	Measure Coil resistance value; Change a transformer if the value infinite.	Overvoltage	Operation under
			Micro-Motion over, reverse braking operation (Starting	Do not over-operation
			Over-current caused by	Refer to contactor items
			Vibration ,Drop	Avoid large bumping in using
	Wire break	Check leading wire,Repair or change transformer if wire break	Vibration ,Drop	Avoid large bumping in using

Contactor & electric reply

Condition	Reasons	Confirmation & solution	Main occurrence	Measurement
NON-STOP	Junction welding,burn out	Star manual operation of the contactor, For contactor,Change one if continuous welding or burn out.; For Electric reply, Visual inspection of the Junction	Micro-Motion over, reverse braking operation (Starting	Do not over-operation
			Overvoltage	Operation under
			Over current cased by overload	Operation under Rated voltage
NO Operation	Coil burning,	Measure coil resistance value; Change coil if the value infinite.	Micro-Motion over, reverse braking operation (Starting	Do not over-operation
			Overvoltage	Operation under

			Shaking caused by low voltage	Operation under Rated voltage
	Movable parts breakage	Star manual operation of the contactor, For contactor replaced it when the action is not smooth; For Electric reply,visual inspect if	Vibration ,Drop	Avoid large bumping in using

Limit switch：

Condition	Reasons	Confirmation & solution	Main occurrence	Measurement
NO Operation （Contactor No operation）	Contact fused	Operate the limit switch, Check the continuity of contactor, replace it if the result is negative	Limit switch used frequently	Do not use limit switch frequently
	Wire break	Inspect the cable, change it if wire break or replace limit switch	Vibration ,Drop	Avoid large bumping in using
	Movable part rusting（movable part bad	Check the movable part, like limit lever, Remove rusty or replace it if it getting ashesive.	Place up/down limit for long time	Don not be placed in up/down limit
Motor did not stop even reach in Upper and down limit	Contact fused	Operate the limit switch, Check the continuity of contactor, replace if it can not stop	Limit switch used frequently	Do not use limit switch frequently
	Movable part rusting	Check the movable part, like limit lever, Remove rusty or replace it if it getting ashesive.	Not using; use in moisture places more.	Regular Checking
	Wiring error	Reference to the wiring diagram, if the limit switch cable is properly connected, then that is the reverse	Wiring error	Properly connect the line as per wiring diagram

Push-button switch：

Condition	Reasons	Confirmation & solution	Main occurrence	Measurement
NO Operation (Contactor No operation）	Emergency button is pressed	If the emergency button is pressed, Turn right the button to recover.	Forgort to recover the emergency button state.	Reading”Push-button switch operation guid” First
	Switch gear fault	Check whether the conduction contacts, replace the switch if it is off	Vibration ,Drop	Avoid large bumping in using
	Wiring break	Check if the button cable is correctly connected to the switching	Vibration ,Drop	Avoid large bumping in using
	Terminal screw loose	Tighten it when loosing	Vibration ,Drop	Avoid large bumping in using
	Button cable wire break	Check if it break over. Replace a cable or button cable when wire break	Cable coating damaged	Do not touch with other equipment
			Cable forced caused by protection line	Install protection line Firmly

The action did not in accordance with display	Wiring error	Reference to the wiring diagram, if the limit switch cable is properly connected, then that is the reverse connection. Swap 2 wire power cords	Wiring error	Properly connect the line as per wiring diagram
Did not Stop even release button	Switch gear part bad restoring	Replace switch when it is not smooth.	Vibration ,Drop	Avoid large bumping in using

Electric shock:

Condition	Reasons	Confirmation & solution	Main occurrence	Measurement
Electric shocked once touching machinery or control switch	Imperfect earth	Measuring earth resistance, Ground wire need to be assembled if the earth resistance below 100Ω	Ground wire	Groundwire connect
			Ground wire bad connection	Assemble firmly to prevent screw
			Cable break	Do not apply excessive force on the cable
	Waterdrop	Clean drop first, using it after dry	Wet hands	Do not operation

Hook：

Condition	Reasons	Confirmation & solution	Main occurrence	Measurement
Hook mouth open	Hool deformation	Replace hook if the deformation beyond permitted range.	Overload	Operation under
			Lifting (ie. hook lift sth. connected with earth)	Do not lift ground object. Do not let the hook hooking
			The load hanging on the hook head; hook is pull	Lifting load with hook central
			Hanger suspension errors	Lifting angle must be controlled within 120 °
			Hanger size is inappropriate with	Using proper hook
Hook twist			Chain wrapped around the load	Do not wrap chain directly
Head part rotating rough	Bearing rust, corrosion	Hand rotation; maintain or replace if rotating rough	Inadequate of grease lubricant;corrosion caused by using	Apply grease lubricant regularly; prevent the hook contamination of
	Bearing damage		Dust	Prevent foreign matter entry head

Load chain：

	Reasons	Confirmation & solution	Main occurrence	Measurement
Chain twisted	bottom hook upturn	Restitute the hook state	Rotate the button hook once during working	Check the hook state before operation, when it is multiple
	Chain twisted in Machinery body	Remove the chain guide, load chain. Re-assembly it.	Improper assembly	Assembly properly
Limit swith sudden work when decline	Chain twisted or knot in Chain bag	Confirm the chain bag capacity (Chain bag nameplate), replace a larger one if capacity insufficient	Chain bag inadequate capacity	Confirm the lifting height and chain bag capacity first
Crackling sound	Change damage	Measuring wearing of the chain link diameter .Replace it when up to the wear limit	Operation under no grease lubricant long time	Apply grease lubricant regularly
spring's knocking sound（cracking sound）	the wear of link part	Measure the diameter on the wear of chain, and replace when arriving at the wear boundary.（referring to P67）	excessive budge operation	Do not do the excessive operation
			overload	Used under the rated load
			pull inclinedly	Don't pull inclinedly
			The wear of load pulley and empty pulley	referring to the item of load pulley and empty pulley
	extension of the pitch	Measure the pitch, and replace when exceeding the limit value.	overload	Used under the rated load
irregular abnormal sound	The damage and deformation on chain surface	Replace it when obvious damage and deformation occur	use under the transition situation	Use under the models with multiple chain
			Chain uses under the Distortions	Assemble Correctly
	Mark of chain surface		strongly hit with other equipments	Pay Attention to the surrounding environment when use to avoid the collision
discoloration and lackluster surface	Rust, corrosion	Remove rust, daub lubricants,and replace when obvious rust and corrosion occurring	Lubricant exhausted	daub lubricating oil Regularly
			use under the rain environment	keep it under the indoor situation or places with ponchos

			influence by seawater and chemical reagent	please inform us if used in the special circumstances,and used correctly in the safeguard range
Load chain fractured	Reaching service life	Check the chain,and replace the equipments which deviate from the specifications.	Mechanical life	operate correctly and manage properly including daily inspection, regular check.

Chain Wheel：

Condition	Reasons	Confirmation & solution	Main occurrence	Measurement
The sound of DaDa	Wear of chain wheel	Check the wear degree on the chain wheel slot and load chain,and replace it if it badly worn.	long use under the condition with grease oil exhausted n,and achieve using life	daub lubricating oil Regularly
			excessive budge operation	Do not do the excessive
			overload	Used under the
			pull inclinedly	Don’t pull inclinedly

Load pulley and empty pulley：

Condition	Reasons	Confirmation & solution	Main occurrence	Measurement
spring’s knocking sound （cracking sound	Wear of pulley	Measure the slot edge thickness and load chain,and replace it if it badly worn.	long use under the condition with grease oil	daub lubricating oil Regularly
			excessive budge	Do not do the
			overload	Used under the
			pull inclinedly	Don’t pull inclinedly

Chain Guide：

Condition	Reasons	Confirmation & solution	Main occurrence	Measurement
Shaking degree become bigger	Wear of chain guide and guide pulley	Measure the benchmark size and load chain,and replace it if it badly worn and exceeding the limit size.	pull inclinedly	Don’t pull inclinedly

Chain Wheel、Junction Part

Condition	Reasons	Confirmation & solution	Main occurrence	Measurement
Couldn't lift loads	wear, breakage	Replace it when obvious wear or breakage occur	long time of use under the condition of insufficient lubricant	Abide by the change cycle of lubricating oil
			long time of use under the condition of insufficient lubricant（the joint part of motor shaft ）	daub lubricating oil When inspect annually
Irregular operation	wear, breakage		Limited switch used too frequently	Don't use the limited switch too frequently

Bearing：

Condition	Reasons	Confirmation &	Main occurrence	Measurement
Couldn't lift loads	Sintering, breakage	Replace the bearing	Under the environment of high temperature or high frequency usage	Avoid to use under the environment of high temperature or high frequency usage
Abnormal sound	Aging	Replace the bearing		

Trolley：

Condition Reasons	Reasons	Confirmation & solution	Main occurrence reasons	Measurement
Couldn't be drived because of the wheel skid	Rail tilt	Confirm the rail slope is within 1 °	Rail Settings is not good	Set up the orbit correctly
Couldn't be drived because of the wheel skid or cannot be drived isokineticly	oil adhere above the orbit wheel tread.	Clean the sundries	use under the environment with easy adherent sundries	clean the orbit regularly
friction sound when travelling on the curve track	The friction resistance between the wheel and rail	Daub the thin lubricating oil on the track tread of abnormal sound.		
Couldn't be drived on the curve track	interference of the curve track and trolley	Confirm that orbit curve's radius is minimal bending radius	used on the curve track of exceeding the limit value	Don't use on the on the curve track of exceeding the limit value
Wheel rised and couldn't be drived	pull inclinedly（Wheel rised）		Operation method	Correct use

wheels stopped revolving	Gear's bite is bad	Remove the things between wheel and gear	Use environment	Confirm regularly
abnormal sound	The adjustment of adjust circle is bad	Confirm adjustment circle number and insert position	Insufficient confirmation	Install correctly
	Wear of wheel	Confirm wear degrees	The travelling surface has bump	Confirm regularly
	Deformation of wheel	Confirm the wheels'bending and surface damage	peneumatied device collided excessively, the travelling surface has bump	Replace and use correctly
	aging of wheel bearings	confirm whether gu long gu long sound exist when the wheel rotates	Reach service life	Replace
	the deformation and wear of track	Confirm rail wear and deformation	Overload or reach service life	Replace and use correctly

Electric Trolley：

Condition Reasons	Reasons	Confirmation & solution	Main occurrence reasons	Measurement
wheels stopped revolving	Brake gelling	open the motor cover,and remove rust and dirt	Use environment	Confirm regularly
	electric fault	Refer to the items of electric chain hoist		
abnormal sound	wear of edge guide wheel	Confirm wear degrees	Reach service life	Confirm regularly
	Wear of friction slices	Confirm wear degrees of friction slices	Reach service life	Confirm regularly

Manual Trolley：

Condition Reasons	Reasons	Confirmation & solution	Main occurrence reasons	Measurement
Hand chain couldn't be moved	the bite between hand wheel and hand chain is bad	Hang the hand chain right up on the handwheel	Acuteness operation, etc	Replace the worn components with deformation

3.4 Structure of electric chain hoist and its parts' details

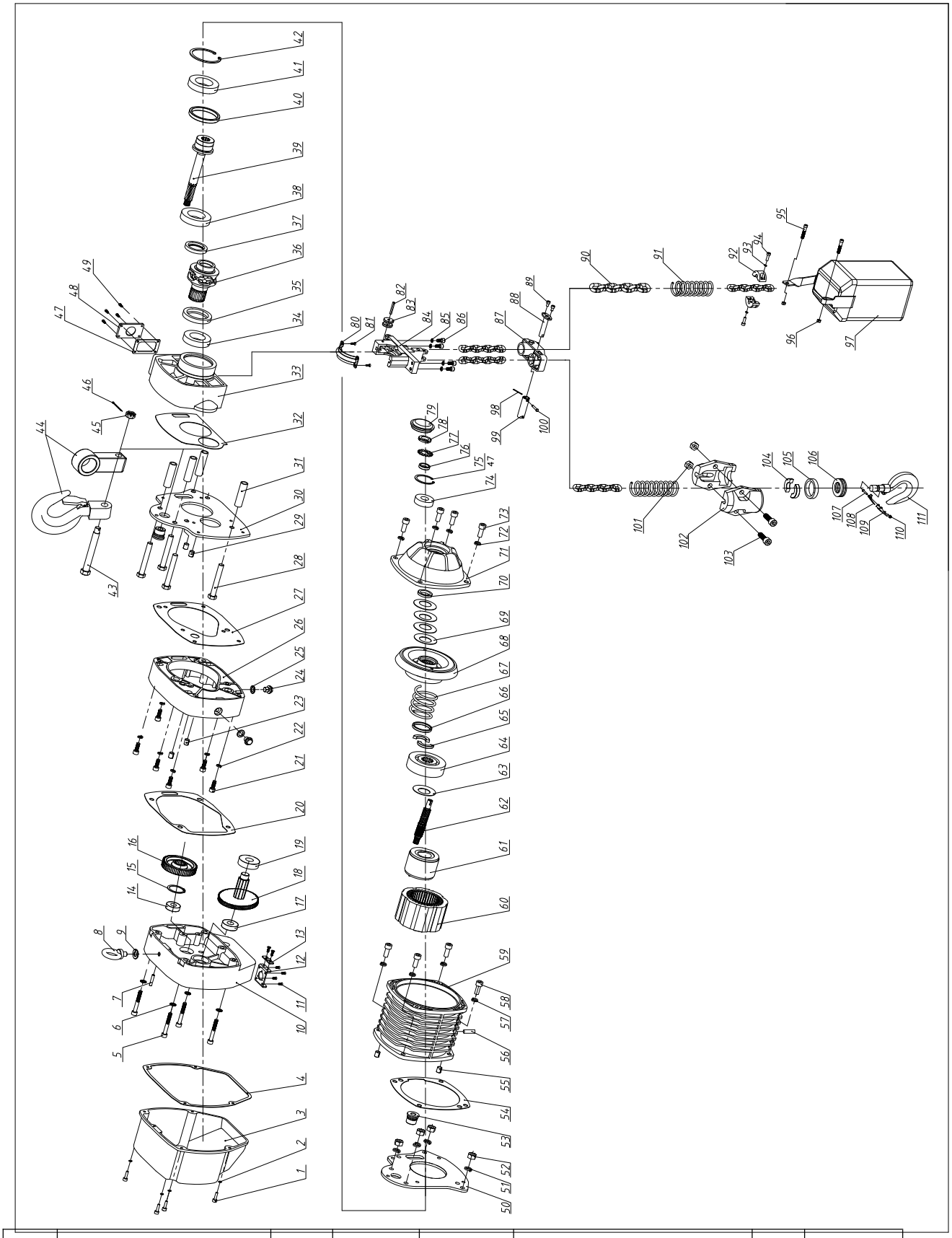

S/N	PART NAME	QTY	REMARK	S/N	PART NAME	QTY	REMARK

1	Hexagonal circular bolt	4		36	chain wheel	1	
2	spring gasket	4		37	Oil seal	1	
3	gearbox base cover	1		38	Deep groove ball bearing	1	
4	Gasket of gearbox base	1		39	Output shaft assemble	1	
5	Hexagonal circular bolt	4		40	Bearing fixed ring	1	
6	Serrated gasket	4		41	Deep groove ball bearing	1	
7	gearbox base cover pin	1		42	Internal circlip	1	
8	Lifting eyebolt	1		43	Hexagonal bolt	1	
9	lifting eyebolt gasket	1		44	Ring	1	matched
10	gearbox	1			up hook assembly	1	by choose
11	Notch countersink bolt	6		45	Slotted hex nuts	1	
12	wiring fixing ring	1		46	Cotter pin	1	
13	wiring fixing ring fittings	1		47	side cover gasket	1	
14	Deep groove ball bearing	1		48	side cover	1	
15	Washer on shaft	1		49	Haxagonal circular bolt	4	
16	Output gear	1		50	Base plate of motor	1	
17	Deep groove ball bearing	1		51	spring gasket	4	
18	Gear-gear shaft	1		52	Nut	4	
19	Deep groove ball bearing	1		53	Bushing	2	
20	Gearbox gasket	1		54	Motor case gasket	1	
21	Hexagonal circular bolt	6		55	Fitting pin	2	
22	spring gasket	6		56	Hexagonal awl bolt	1	
23	Fitting pin	2		57	spring gasket	4	
24	Hex bolt	2		58	Hexagonal circular bolt	4	
25	Hex bolt gasket	2		59	Motor case	1	
26	Middle pieces	1		60	motor stator	1	
27	Middle pieces gasket	1		61	motor rotor	1	
28	Panels bolts	4		62	motor axle	1	
29	Fitting pin	2		63	disc spring	1	big
30	gearbox base plate	1		64	guide block	1	
31	Connection joint	4		65	Two-piece ring	2	
32	connection box gasket	1		66	Fixing ring	1	
33	connection box	1		67	Brake spring	1	
34	Deep groove ball bearing	1		68	Brake assembly	1	
35	Oil seal	1		69	disc spring	4	small

					BOM		
SYM	INT.	CHANGE NO.	DATE	SIGN		DWG.SYM.	
DR		INSP.	APP.				

S/N	PART NAME	QTY	REMARK	S/N	PART NAME	QTY	REMARK

70	Rotor gasket	1		105	Hook Fixing Ring		1	
71	End cover of motor	1		106	Mono directional ball bearing		1	
72	spring gasket	4		107	Cross recess head screw		1	
73	Hexagonal circular bolt	4		108	Hook spring		1	
74	Deep groove ball bearing	1		109	Safety piece		1	
75	Internal circlip	1		110	Hexagonal nut		1	
76	Upper gasket of the ring	1		111	Bottom hook		1	
77	Locking piece	1						
78	Screw cap	1						
79	Rubber cover	1						
80	Guide sheet iron	1						
81	Notch countersink bolt	2						
82	Pulley axle	1						
83	Guide pulley	1						
84	Chain guide	1						
85	spring gasket	4						
86	Hexagonal circular bolt	4						
87	Guide bracket assembly	1						
88	Stop pin assembly	1						
89	Hexagonal circular bolt	2						
90	chain	7pcs						
91	Limit spring	2						
92	chain limit ring	2						
93	spring gasket	2						
94	Hexagonal circular bolt	2						
95	Hexagonal circular bolt	2						
96	Hexagonal Nut	2						
97	chain bag assembly	1						
98	Cotter pin	1						
99	Connection shaft of limit switch	1						
100	Pin roll	1						
101	Hexagonal Nut	2						
102	Single back-hooking case	1						
103	Hexagonal circular bolt	2						
104	Hook Two-piece Ring	7pairs						

					BOM		
SYM	INT.	CHANGE NO.	DATE	SIGN		DWG.SYM.	
DR		INSP.	APP.				