BSM Union (RJT) Fittings

Application

- Australia commonly employs unions featuring a captive seal design for a seamless, crevice-free internal bore. These hygienic unions play a crucial role in the food and beverage industry, facilitating the connection of tubes, valves, pumps, tanks, or hoses. Distinguished by a distinct liner and a genuine O-ring in contrast to the New Zealand version, they offer versatility with various elastomer O-rings tailored to specific applications. Users can choose between two types of nuts: slotted and hexed.

RJT Welding Male

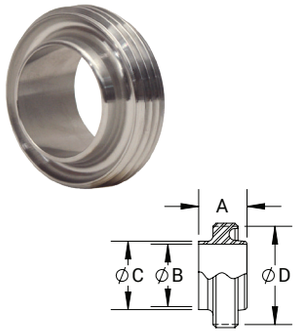

Standard
- RJT (BSM) AS1528.2 - 2001 screwed couplings

Material
- 316 stainless steel

Size		Part Numbers	A	B	C	D
mm	inch		(mm)	(mm)	(mm)	(mm)
25.4	1	15A-R100RJT	27.0	22.1	25.4	45.7 x 8T
38.1	1½	15A-R150RJT	27.0	34.8	38.1	58.4 x 8T
50.8	2	15A-R200RJT	27.0	47.5	50.8	72.7 x 6T
63.5	2½	15A-R250RJT	27.0	60.2	63.5	85.4 x 6T
76.2	3	15A-R300RJT	27.0	72.9	76.2	98.1 x 6T
101.6	4	15A-R400RJT	27.0	97.4	101.85	123.5 x 6T

Product Group: AV02

Welding Male CIP Flat Face

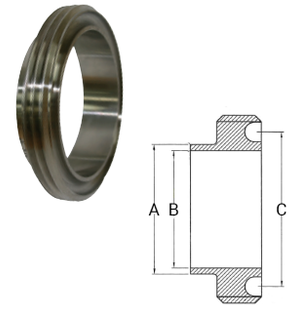

Standard
- Flat face couplings AS1528.2 - 2001 screwed couplings

Material
- 316 stainless steel

Size		Part Numbers	A	B	C
mm	inch		(mm)	(mm)	(mm)
25.4	1	15A-R100RJT-CIP	22.0	22.2	25.4
38.1	1½	15A-R150RJT-CIP	22.0	34.9	38.1
50.8	2	15A-R200RJT-CIP	22.0	47.6	50.8
63.5	2½	15A-R250RJT-CIP	22.0	60.3	63.5
76.2	3	15A-R300RJT-CIP	22.0	73.0	76.2
101.6	4	15A-R400RJT-CIP	22.0	98.4	101.6

Product Group: AV02

RJT Welding Liner

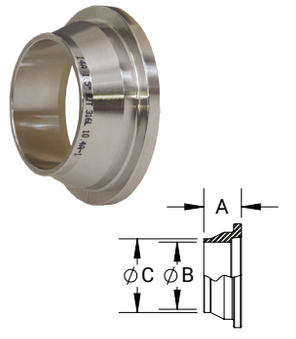

Standard
- RJT (BSM) AS1528.2 - 2001 screwed couplings

Material
- 316 stainless steel

Size		Part Numbers	A	B	C
mm	inch		(mm)	(mm)	(mm)
25.4	1	14A-R100RJT	19.5	22.1	25.4
38.1	1½	14A-R150RJT	19.5	34.8	38.1
50.8	2	14A-R200RJT	19.5	47.5	50.8
63.5	2½	14A-R250RJT	19.5	60.2	63.5
76.2	3	14A-R300RJT	19.5	72.9	76.2
101.6	4	14A-R400RJT	19.5	97.4	101.85

Product Group: AV02

Welding Liner CIP Flat Face

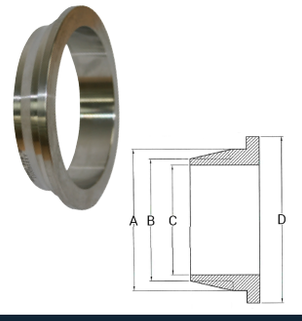

Standard
- Flat face couplings AS1528.2 - 2001 screwed couplings

Material
- 316 stainless steel

Size		Part Numbers	A	B	C	D
mm	inch		(mm)	(mm)	(mm)	(mm)
25.4	1	14A-R100RJT-CIP	32.6	25.4	22.2	41.3
38.1	1½	14A-R150RJT-CIP	45.3	38.1	34.9	54.0
50.8	2	14A-R200RJT-CIP	58.0	50.8	47.6	66.7
63.5	2½	14A-R250RJT-CIP	70.7	63.5	60.3	79.4
76.2	3	14A-R300RJT-CIP	83.4	76.2	73.0	92.1
101.6	4	14A-R400RJT-CIP	108.8	101.6	98.4	117.5

Product Group: AV02