Double-row Angular Contact Ball Bearings

Bore Diameter: 10～45mm

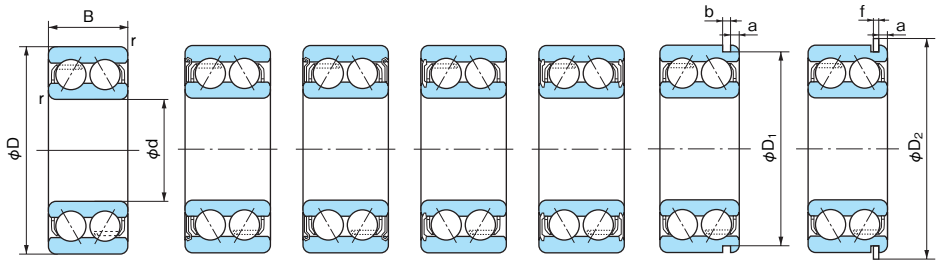

Open type | One shield (Z) | Two shields (ZZ) | One seal (NS) | Two seals (2NS) | With snap ring groove (N) | With snap ring (NR)

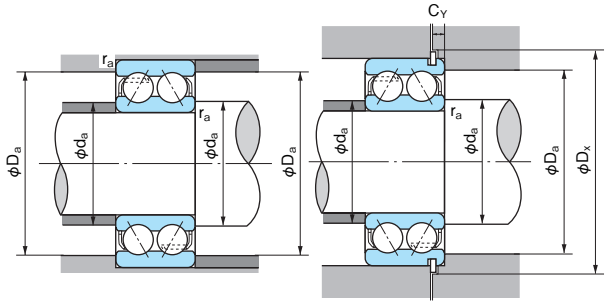

Dynamic equivalent radial load

Pr=XFr+YFa

Contact angle	e	Fa/Fr ≦ e		Fa/Fr > e	
		X	Y	X	Y
30°	0.80	1.0	0.78	0.63	1.24
20°	0.57	1.0	1.09	0.70	1.63

Static equivalent radial load

Nominal contact angle 30° : Por=Fr+0.66Fa

Nominal contact angle 20° : Por=Fr+0.84Fa

1N=0.102kgf

Boundary dimensions (mm)				Bearing No.							Basic dynamic load rating Cr (N)	Basic static load rating Cor (N)	Limiting speed (min-1)		Dimensions of snap ring groove and snap ring (mm)					Abutment and fillet dimensions (mm)					Mass (kg)	Bearing No.
d	D	B	r (min)	Open type	Shield type		Seal type		With snap ring groove	With snap ring			Grease lubrication	Oil lubrication	D1 (max)	a (max)	b (min)	D2 (max)	f (max)	da (min)	Da (max)	Dx (min)	ra (max)	CY (max)		
10	30	14.3	0.6	5200	5200Z	5200ZZ	5200NS	5200-2NS	5200N	5200NR	7300	4000	18000	24000	28.17	2.06	1.35	34.7	1.12	15	25	35.5	0.6	2.9	0.050	5200
	30	14.3	0.6	5200A	5200AZ	5200AZZ	5200ANS	5200A-2NS	5200AN	5200ANR	6950	3800	16000	22000	28.17	2.06	1.35	34.7	1.12	15	25	35.5	0.6	2.9	0.050	5200A
12	32	15.9	0.6	5201	5201Z	5201ZZ	5201NS	5201-2NS	5201N	5201NR	10700	5950	16000	22000	30.15	2.06	1.35	36.7	1.12	17	27	37.5	0.6	2.9	0.060	5201
	32	15.9	0.6	5201A	5201AZ	5201AZZ	5201ANS	5201A-2NS	5201AN	5201ANR	10300	5650	15000	20000	30.15	2.06	1.35	36.7	1.12	17	27	37.5	0.6	2.9	0.060	5201A
15	35	15.9	0.6	5202	5202Z	5202ZZ	5202NS	5202-2NS	5202N	5202NR	11900	7200	14000	19000	33.17	2.06	1.35	39.7	1.12	20	30	40.5	0.6	2.9	0.070	5202
	35	15.9	0.6	5202A	5202AZ	5202AZZ	5202ANS	5202A-2NS	5202AN	5202ANR	11400	6850	12000	17000	33.17	2.06	1.35	39.7	1.12	20	30	40.5	0.6	2.9	0.070	5202A
17	40	17.5	0.6	5203	5203Z	5203ZZ	5203NS	5203-2NS	5203N	5203NR	15000	9250	12000	17000	38.1	2.06	1.35	44.6	1.12	22	35	45.5	0.6	2.9	0.090	5203
	40	17.5	0.6	5203A	5203AZ	5203AZZ	5203ANS	5203A-2NS	5203AN	5203ANR	14200	8800	11000	15000	38.1	2.06	1.35	44.6	1.12	22	35	45.5	0.6	2.9	0.090	5203A
	47	22.2	1	5303	—	—	—	—	5303N	5303NR	21300	12700	10000	14000	44.6	2.46	1.35	52.7	1.12	23	41	53.5	1	3.3	0.140	5303
20	47	20.6	1	5204	5204Z	5204ZZ	5204NS	5204-2NS	5204N	5204NR	20000	12700	10000	14000	44.6	2.46	1.35	52.7	1.12	26	41	53.5	1	3.3	0.120	5204
	47	20.6	1	5204A	5204AZ	5204AZZ	5204ANS	5204A-2NS	5204AN	5204ANR	19000	12100	9500	13000	44.6	2.46	1.35	52.7	1.12	26	41	53.5	1	3.3	0.120	5204A
	52	22.2	1.1	5304	—	—	—	—	5304N	5304NR	21700	13300	9000	11000	49.73	2.46	1.35	57.9	1.12	27	45	58.5	1	3.3	0.230	5304
25	52	20.6	1	5205	5205Z	5205ZZ	5205NS	5205-2NS	5205N	5205NR	21800	15100	9500	13000	49.73	2.46	1.35	57.9	1.12	31	46	58.5	1	3.3	0.190	5205
	52	20.6	1	5205A	5205AZ	5205AZZ	5205ANS	5205A-2NS	5205AN	5205ANR	20600	14300	8000	11000	49.73	2.46	1.35	57.9	1.12	31	46	58.8	1	3.3	0.190	5205A
	62	25.4	1.1	5305	—	—	—	—	5305N	5305NR	32000	21600	7300	10000	59.61	3.28	1.9	67.7	1.7	32	55	68.5	1	4.7	0.340	5305
30	62	23.8	1	5206	—	—	—	—	5206N	5206NR	30500	21700	8000	11000	59.61	3.28	1.9	67.7	1.7	36	56	68.5	1	4.7	0.290	5206
	62	23.8	1	—	5206Z	5206ZZ	5206NS	5206-2NS	—	—	25900	18700	8000	—	—	—	—	—	—	36	56	—	1	—	0.290	5206Z
	62	23.8	1	5206A	—	—	—	—	5206AN	5206ANR	28600	20500	7000	9500	59.61	3.28	1.9	67.7	1.7	36	56	68.5	1	4.7	0.290	5206A
	62	23.8	1	—	5206AZ	5206AZZ	5206ANS	5206A-2NS	—	—	24400	17700	7000	—	—	—	—	—	—	36	56	—	1	—	0.290	5206AZ
	72	30.2	1.1	5306	—	—	—	—	5306N	5306NR	41500	29000	7000	9500	68.81	3.28	1.9	78.6	1.7	37	65	80	1	4.7	0.510	5306
35	72	27	1.1	5207	—	—	—	—	5207N	5207NR	40000	29500	7000	9500	68.81	3.28	1.9	78.6	1.7	42	65	80	1	4.7	0.430	5207
	72	27	1.1	—	5207Z	5207ZZ	5207NS	5207-2NS	—	—	35000	25900	7000	—	—	—	—	—	—	42	65	—	1	—	0.430	5207Z
	72	27	1.1	5207A	—	—	—	—	5207AN	5207ANR	38000	27700	6000	8000	68.81	3.28	1.9	78.6	1.7	42	65	80	1	4.7	0.430	5207A
	72	27	1.1	—	5207AZ	5207AZZ	5207ANS	5207A-2NS	—	—	33000	24500	6000	—	—	—	—	—	—	42	65	—	1	—	0.430	5207AZ
	80	34.9	1.5	5307	—	—	—	—	5307N	5307NR	52000	37000	6300	8500	76.81	3.28	1.9	86.6	1.7	44	71	88	1.5	4.7	0.790	5307
40	80	30.2	1.1	5208	—	—	—	—	5208N	5208NR	45500	34000	6000	8000	76.81	3.28	1.9	86.6	1.7	47	73	88	1	4.7	0.570	5208
	80	30.2	1.1	—	5208Z	5208ZZ	5208NS	5208-2NS	—	—	40000	30500	6000	—	—	—	—	—	—	47	73	—	1	—	0.570	5208Z
	80	30.2	1.1	5208A	—	—	—	—	5208AN	5208ANR	42500	32500	5300	7200	76.81	3.28	1.9	86.6	1.7	47	73	88	1	4.7	0.570	5208A
	80	30.2	1.1	—	5208AZ	5208AZZ	5208ANS	5208A-2NS	—	—	37500	28700	5300	—	—	—	—	—	—	47	73	—	1	—	0.570	5208AZ
	90	36.5	1.5	5308	—	—	—	—	5308N	5308NR	63500	46500	5500	7500	86.79	3.28	2.7	96.5	2.46	49	81	98	1.5	5.4	1.05	5308
45	85	30.2	1.1	5209	—	—	—	—	5209N	5209NR	51000	39000	5500	7500	81.81	3.28	1.9	91.6	1.7	52	78	93	1	4.7	0.620	5209
	85	30.2	1.1	—	5209Z	5209ZZ	5209NS	5209-2NS	—	—	42500	34500	5500	—	—	—	—	—	—	52	78	—	1	—	0.620	5209Z
	85	30.2	1.1	5209A	—	—	—	—	5209AN	5209ANR	48000	37000	5000	6700	81.81	3.28	1.9	91.6	1.7	52	78	93	1	4.7	0.620	5209A
	85	30.2	1.1	—	5209AZ	5209AZZ	5209ANS	5209A-2NS	—	—	40000	32500	5000	—	—	—	—	—	—	52	78	—	1	—	0.620	5209AZ
	100	39.7	1.5	5309	—	—	—	—	5309N	5309NR	76500	56500	5000	6700	96.8	3.28	2.7	106.5	2.46	54	91	108	1.5	5.4	1.42	5309

Remark: Dimensions and tolerances of snap ring groove and snap ring are shown on pages 45 to 48.

Double-row Angular Contact Ball Bearings

Bore Diameter: 50～85mm

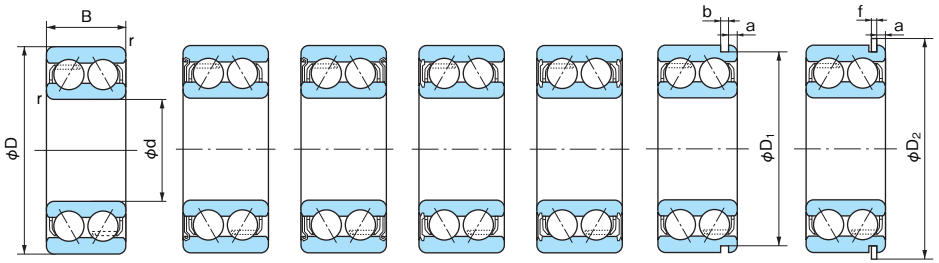

Open type | One shield (Z) | Two shields (ZZ) | One seal (NS) | Two seals (2NS) | With snap ring groove (N) | With snap ring (NR)

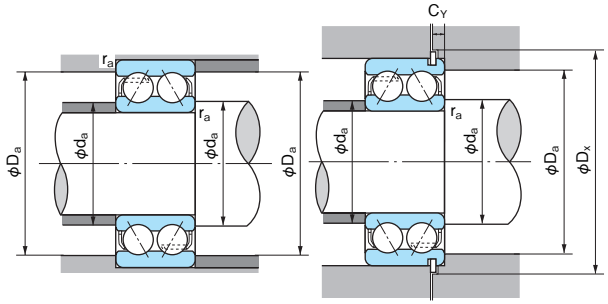

Dynamic equivalent radial load

Pr=XFr+YFa

Contact angle	e	Fa/Fr ≦ e		Fa/Fr > e	
		X	Y	X	Y
30°	0.80	1.0	0.78	0.63	1.24
20°	0.57	1.0	1.09	0.70	1.63

Static equivalent radial load

Nominal contact angle 30° : Por=Fr+0.66Fa

Nominal contact angle 20° : Por=Fr+0.84Fa

1N=0.102kgf

Boundary dimensions (mm)				Bearing No.							Basic dynamic load rating Cr (N)	Basic static load rating Cor (N)	Limiting speed (min⁻¹)		Dimensions of snap ring groove and snap ring (mm)					Abutment and fillet dimensions (mm)					Mass (kg)	Bearing No.
d	D	B	r (min)	Open type	Shield type		Seal type		With snap ring groove	With snap ring			Grease lubrication	Oil lubrication	D_1 (max)	a (max)	b (min)	D_2 (max)	f (max)	da (min)	Da (max)	Dx (min)	ra (max)	C_Y (max)		
50	90	30.2	1.1	5210	—	—	—	—	5210N	5210NR	54500	44500	5000	6700	86.79	3.28	2.7	96.5	2.46	57	83	98	1	5.4	0.670	5210
	90	30.2	1.1	—	5210Z	5210ZZ	5210NS	5210-2NS	—	—	45000	39000	5000	—	—	—	—	—	—	57	83	—	1	—	0.670	5210Z
	90	30.2	1.1	5210A	—	—	—	—	5210AN	5210ANR	51000	42000	4500	6000	86.79	3.28	2.7	96.5	2.46	57	83	98	1	5.4	0.670	5210A
	90	30.2	1.1	—	5210AZ	5210AZZ	5210ANS	5210A-2NS	—	—	42000	36500	4500	—	—	—	—	—	—	57	83	—	1	—	0.670	5210AZ
	110	44.4	2	5310	—	—	—	—	5310N	5310NR	90000	68000	4500	6000	106.81	3.28	2.7	116.6	2.46	60	100	118	2	5.4	1.93	5310
55	100	33.3	1.5	5211	—	—	—	—	5211N	5211NR	67500	56500	4500	6300	96.8	3.28	2.7	106.5	2.46	64	91	108	1.5	5.4	0.960	5211
	100	33.3	1.5	—	5211Z	5211ZZ	—	—	—	—	57500	50500	4500	—	—	—	—	—	—	64	91	—	1.5	—	0.960	5211Z
	100	33.3	1.5	5211A	—	—	—	—	5211AN	5211ANR	63500	53000	4000	5500	96.8	3.28	2.7	106.5	2.46	64	91	108	1.5	5.4	0.960	5211A
	100	33.3	1.5	—	5211AZ	5211AZZ	—	—	—	—	54000	47500	4000	—	—	—	—	—	—	64	91	—	1.5	—	0.960	5211AZ
	120	49.2	2	5311	—	—	—	—	5311N	5311NR	112000	86500	4000	5500	115.21	4.06	3.1	129.7	2.82	65	110	131.5	2	6.5	2.30	5311
60	110	36.5	1.5	5212	—	—	—	—	5212N	5212NR	76000	62000	4300	5600	106.81	3.28	2.7	116.6	2.46	69	101	118	1.5	5.4	1.36	5212
	110	36.5	1.5	—	5212Z	5212ZZ	—	—	—	—	67000	57500	4300	—	—	—	—	—	—	69	101	—	1.5	—	1.36	5212Z
	110	36.5	1.5	5212A	—	—	—	—	5212AN	5212ANR	71500	58500	3800	5000	106.81	3.28	2.7	116.6	2.46	69	101	118	1.5	5.4	1.36	5212A
	110	36.5	1.5	—	5212AZ	5212AZZ	—	—	—	—	63000	54000	3800	—	—	—	—	—	—	69	101	—	1.5	—	1.36	5212AZ
	130	54	2.1	5312	—	—	—	—	5312N	5312NR	128000	101000	3800	5000	125.22	4.06	3.1	139.7	2.82	72	118	141.5	2	6.5	3.16	5312
65	120	38.1	1.5	5213	—	—	—	—	5213N	5213NR	89000	77000	3900	5300	115.21	4.06	3.1	129.7	2.82	74	111	131.5	1.5	6.5	1.66	5213
	120	38.1	1.5	—	5213Z	5213ZZ	—	—	—	—	78500	71000	3900	—	—	—	—	—	—	74	111	—	1.5	—	1.66	5213Z
	120	38.1	1.5	5213A	—	—	—	—	5213AN	5213ANR	83500	72500	3400	4600	115.21	4.06	3.1	129.7	2.82	74	111	131.5	1.5	6.5	1.66	5213A
	120	38.1	1.5	—	5213AZ	5213AZZ	—	—	—	—	73500	66500	3400	—	—	—	—	—	—	74	111	—	1.5	—	1.66	5213AZ
	140	58.7	2.1	5313	—	—	—	—	5313N	5313NR	145000	115000	3600	4700	135.23	4.9	3.1	149.7	2.82	77	128	152	2	7.4	3.86	5313
70	125	39.7	1.5	5214	—	—	—	—	5214N	5214NR	96500	84500	3800	5000	120.22	4.06	3.1	134.7	2.82	79	116	136.5	1.5	6.5	1.82	5214
	125	39.7	1.5	—	5214Z	5214ZZ	—	—	—	—	86000	79000	3800	—	—	—	—	—	—	79	116	—	1.5	—	1.82	5214Z
	125	39.7	1.5	5214A	—	—	—	—	5214AN	5214ANR	90500	79500	3200	4500	120.22	4.06	3.1	134.7	2.82	79	116	136.5	1.5	6.5	1.82	5214A
	125	39.7	1.5	—	5214AZ	5214AZZ	—	—	—	—	80500	74000	3200	—	—	—	—	—	—	79	116	—	1.5	—	1.82	5214AZ
	150	63.5	2.1	5314	—	—	—	—	5314N	5314NR	163000	132000	3200	4300	145.24	4.9	3.1	159.7	2.82	82	138	162	2	7.4	4.88	5314
75	130	41.3	1.5	5215	—	—	—	—	5215N	5215NR	96000	85500	3400	4700	125.22	4.06	3.1	139.7	2.82	84	121	141.5	1.5	6.5	1.91	5215
	130	41.3	1.5	—	5215Z	5215ZZ	—	—	—	—	94000	87000	3400	—	—	—	—	—	—	84	121	—	1.5	—	1.91	5215Z
	130	41.3	1.5	5215A	—	—	—	—	5215AN	5215ANR	90000	80500	3200	4300	125.22	4.06	3.1	139.7	2.82	84	121	141.5	1.5	6.5	1.91	5215A
	130	41.3	1.5	—	5215AZ	5215AZZ	—	—	—	—	88000	81500	3200	—	—	—	—	—	—	84	121	—	1.5	—	1.91	5215AZ
	160	68.3	2.1	5315	—	—	—	—	5315N	5315NR	178000	149000	3000	4000	155.22	4.9	3.1	169.7	2.82	87	148	172	2	7.4	5.51	5315
80	140	44.4	2	5216	—	—	—	—	5216N	5216NR	104000	94000	3500	4600	135.23	4.9	3.1	149.7	2.82	90	130	152	2	7.4	2.48	5216
	140	44.4	2	5216A	—	—	—	—	5216AN	5216ANR	97500	88500	2800	4000	135.23	4.9	3.1	149.7	2.82	90	130	152	2	7.4	2.48	5216A
	170	68.3	2.1	5316	—	—	—	—	5316N	5316NR	192000	167000	2800	4000	163.65	5.69	3.5	182.9	3.1	92	158	185	2	8.4	6.81	5316
85	150	49.2	2	5217	—	—	—	—	5217N	5217NR	112000	103000	3000	4000	145.24	4.9	3.1	159.7	2.82	95	140	162	2	7.4	3.40	5217
	150	49.2	2	5217A	—	—	—	—	5217AN	5217ANR	105000	96500	2600	3800	145.24	4.9	3.1	159.7	2.82	95	140	162	2	7.4	3.40	5217A

Remark: Dimensions and tolerances of snap ring groove and snap ring are shown on pages 45 to 48.