CONFLEX ISOLATORS

Conflex isolators are designed to meet almost all machinery installations within the load range. available in four rubber hardnesses they are the versatile answer to your mobile or static vibration problems.

Available in Neoprene for “NM12” suffix part numbers

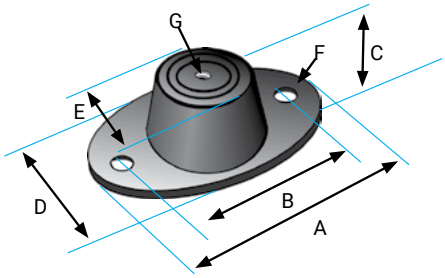

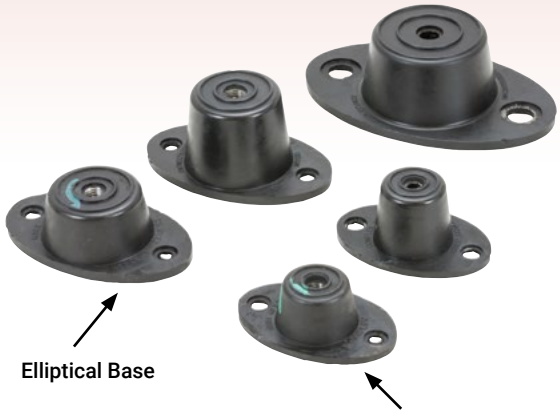

Part No.	Duro	A	B	C	D	E	F	G	Load Kg	Deflection mm	Weight Kg
M111135	35	80	60	28	50	31	8.5	M8	38	6.0	0.08
M111145	45	80	60	28	50	31	8.5	M8	47	6.0	0.08
M111155	55	80	60	28	50	31	8.5	M8	60	6.0	0.08
M111165	65	80	60	28	50	31	8.5	M8	83	6.0	0.08
M1111D35	35	80	60	38	50	31	8.5	M8	40	8.0	0.09
M1111D45	45	80	60	38	50	31	8.5	M8	65	8.0	0.09
M1111D55	55	80	60	38	50	31	8.5	M8	80	8.0	0.09
M1111D65	65	80	60	38	50	31	8.5	M8	110	8.0	0.09
M111235	35	100	76	32	60	46	8.5	M10	90	6.0	0.15
M111245	45	100	76	32	60	46	8.5	M10	110	6.0	0.15
M111255	55	100	76	32	60	46	8.5	M10	160	6.0	0.15
M111265	65	100	76	32	60	46	8.5	M10	220	6.0	0.15
M1112D35	35	100	76	48	60	45	8.5	M10	80	10.0	0.17
M1112D45	45	100	76	48	60	45	8.5	M10	120	10.0	0.17
M1112D55	55	100	76	48	60	45	8.5	M10	160	10.0	0.17
M1112D65	65	100	76	48	60	45	8.5	M10	250	10.0	0.17
M111435	35	140	104	44	85	60	14.0	M12	115	6.0	0.43
M111445	45	140	104	44	85	60	14.0	M12	170	6.0	0.43
M111455	55	140	104	44	85	60	14.0	M12	240	6.0	0.43
M111465	65	140	104	44	85	60	14.0	M12	405	6.0	0.43
NEOPRENE											
M111235NM12-RED	35	100	76	32	60	48	8.5	M12	90	6.0	0.15
M111255NM12-GRN	55	100	76	32	60	48	8.5	M12	160	6.0	0.15
M111265NM12-GRY	65	100	76	32	60	48	8.5	M12	250	6.0	0.15

= hardness (35,45,55,65)

STATIONARY APPLICATION

When used with centre nut & bolt, It becomes an easy to install Machine Footing

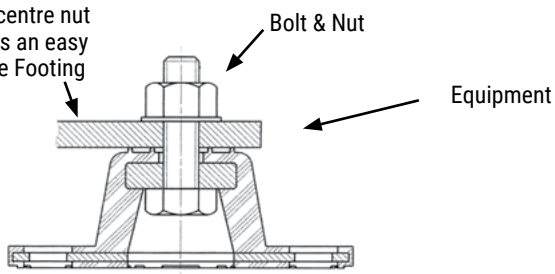

Note: Rubber & Steel washer not supplied by Mackay Consolidated

MOBILE APPLICATION

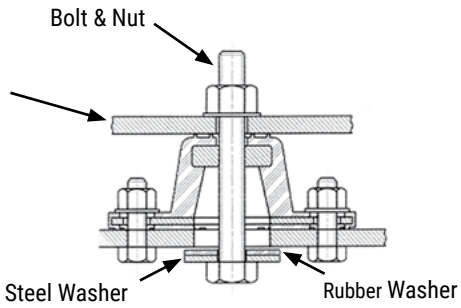

All properties nominal, contact Mackay for Technical advice

All Dimensions in Millimetres

© Mackay Australia Pty Ltd 2026